For Your Records and Warranty Assistance
For reference, also attach your receipt or a copy of your receipt to the manual.

_____
Model Name

_____
Model No.

_____
Date Purchased

_____
Where Purchased

Type 2 Models

Owner's Guide and Installation Manual

English

Español

SINCE 1886

Hunter®

Form# 42672-01
20110302
©2011 Hunter Fan Co.

Welcome

Your new Hunter® ceiling fan is an addition to your home or office that will provide comfort and performance for many years. This installation and operation manual gives you complete instructions for installing and operating your fan.

We are proud of our work. We appreciate the opportunity to supply you with the best ceiling fan available anywhere in the world.

Before installing your fan, for your records and warranty assistance, record information from the carton and Hunter nameplate label (located on the top of the fan motor housing).

Cautions and Warnings

- **READ THIS ENTIRE MANUAL CAREFULLY BEFORE BEGINNING INSTALLATION. SAVE THESE INSTRUCTIONS.**
- Use only Hunter replacement parts.
- To reduce the risk of personal injury, attach the fan directly to the support structure of the building according to these instructions, and use only the hardware supplied.
- To avoid possible electrical shock, before installing your fan, disconnect the power by turning off the circuit breakers to the outlet box and associated wall switch location. If you cannot lock the circuit breakers in the off position, securely fasten a prominent warning device, such as a tag, to the service panel.
- All wiring must be in accordance with national and local electrical codes and ANSI/NFPA 70. If you are unfamiliar with wiring, use a qualified electrician.
- To reduce the risk of personal injury, do not bend the blade attachment system when installing, balancing, or cleaning the fan. Never insert foreign objects between rotating fan blades.
- To reduce the risk of fire, electrical shock, or motor damage, do not use a solid-state speed control with this fan. Use only Hunter speed controls.

Table Of Contents

1 • Getting Ready 6

2 • Installing the Ceiling Plate 7

3 • Assembling and Hanging the Fan . . . 8

4 • Wiring the Fan 9

5 • Installing the Canopy and Canopy Trim Ring 10

6 • Assembling the Blades. 11

8 • Operating and Cleaning Your Ceiling Fan 13

9 • Troubleshooting. 14

© 2011 Hunter Fan Company

Preparing the Fan Site

Step 1 - Choose the Fan Site

Proper ceiling fan location and attachment to the building structure are essential for safety, reliable operation, maximum efficiency, and energy savings.

Choose a fan site where:

- No object can come in contact with the rotating fan blades during normal operation.
- The fan blades are at least 7 feet above the floor and the ceiling is at least 8 feet high.
- The fan blades have no obstructions to airflow, such as walls or posts, within 30 inches of the fan blade tips.
- The fan is directly below a joist or support brace that will hold the outlet box and the full weight of the fan.

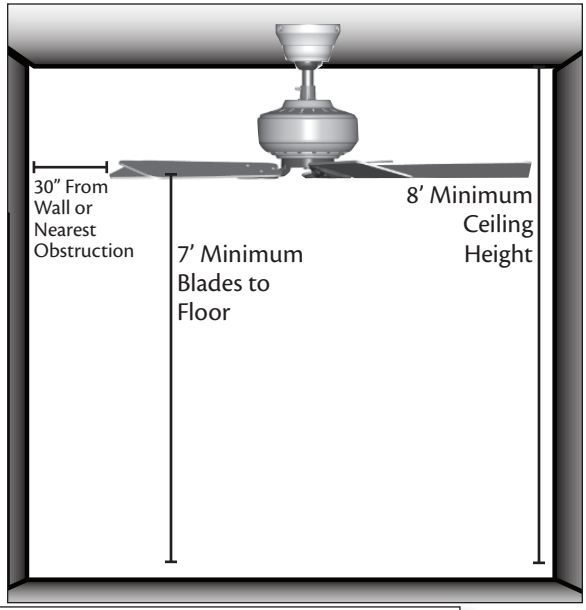

Checklist for Existing Fan Site

If you want to use an existing fan site, complete the following checklist to determine if the site is acceptable and safe for your new Hunter fan. If you cannot check off every item, prepare a new fan site as described on this page.

Fan Support System

- **Fan attaches directly to building structure.**
- Fan support system will hold full weight of the fan and light kit.

Ceiling Hole

- The outlet box clearance hole is directly below the joist or support brace.

Outlet Box

- The outlet box is an UL-approved octagonal 4" x 1-1/2" outlet box (or as specified by the support brace manufacturer).
- The outlet box is secured to the joist or support brace by wood screws and washers through the inner holes of outlet box.
- The outer holes of the outlet box are aligned with joist or support brace.
- The bottom of the outlet box is recessed a minimum of 1/16" into ceiling.

Wiring

- The electrical cable is secured to outlet box by an approved connector.
- Six inches of lead wires extend from outlet box.

If your existing fan site is suitable, skip ahead to Section **2 • Installing the Ceiling Plate.**

Suitable Existing Fan Site

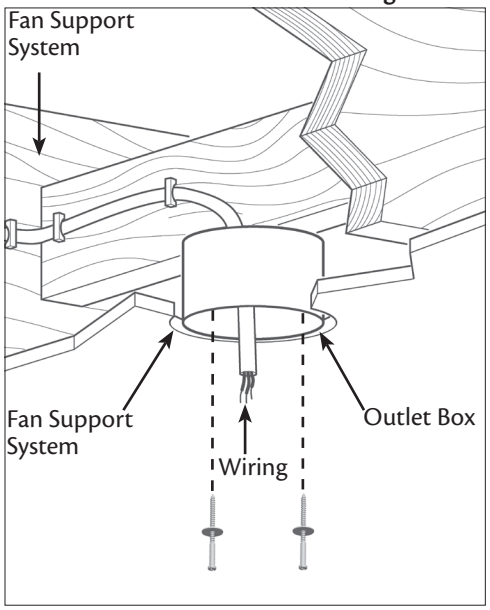

Step 2 - Cut the Ceiling Hole

2-1. Locate the site for the ceiling hole directly below the joist or support brace that will hold the outlet box and fan.

2-2. Cut a 4" diameter hole through the drywall or plaster of the ceiling. You will use the hole to install the support brace and outlet box.

Step 3 - Install a Support Brace, If Necessary

Determine if there is a ceiling joist directly above the ceiling hole. If the joist is there, determine if it is positioned to allow you to recess the outlet box a minimum of 1/16" into the ceiling. If NOT, install a support brace as follows:

3-1. Attach a 2" x 4" support brace between two joists. Position it to allow you to recess the bottom of the outlet box a minimum of 1/16" into the ceiling.

3-2. Check the support brace to ensure it will support the full weight of the fan and light kit.

Step 4 - Install the Outlet Box

4-1. Obtain a UL-approved octagonal 4" x 1-1/2" outlet box, plus two #8 x 1-1/2" wood screws and washers, available from any hardware store or electrical supply house.

4-2. Orient the outlet box so that both the inner and outer holes in the box align with the joist or support brace.

4-3. Drill pilot holes no larger than the minor diameter of the wood screws (5/64") through the inner holes of the outlet box.

4-4. Attach the outlet box directly to the support brace or joist with two #8 x 1-1/2" wood screws and washers. The bottom of the outlet box must be recessed a minimum of 1/16" into the ceiling.

Step 5 - Prepare the Wiring

5-1. Make sure the circuit breakers to the fan supply line leads and associated wall switch location are turned off . If you cannot lock the circuit breakers in the off position, securely fasten a prominent warning device, such as a tag, to the service panel.

5-2. Thread the fan supply line through the outlet box so that the fan supply line extends at least 6" beyond the box.

5-3. Attach the fan supply line to the outlet box with an approved connector, available at any hardware store or electrical supply house.

5-4. Make certain the wiring meets all national and local standards and ANSI/NFPA 70.

You have now successfully prepared your ceiling fan site. For instructions to install your ceiling fan, go to your fan manual and continue with Section **2 • Installing the Ceiling Plate.**

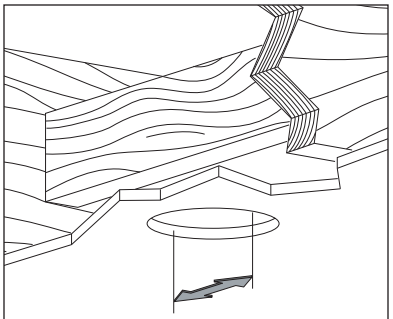

Steps 2 – 3

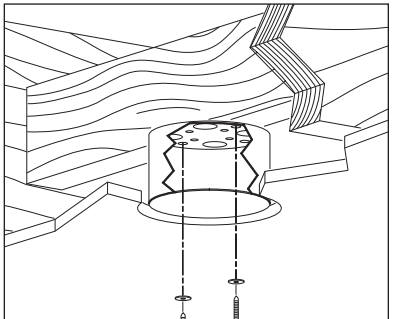

Step 4

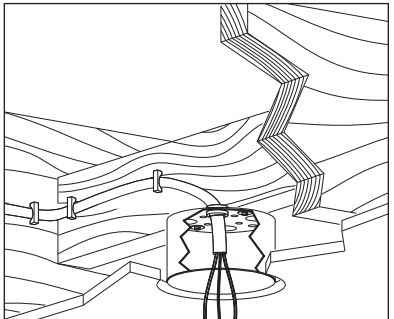

Step 5

⚠ **CAUTION:** All wiring must be in accordance with national and local electrical codes and ANSI/NFPA 70. If you are unfamiliar with wiring, use a qualified electrician.

Installer's Choice and Optional Accessories

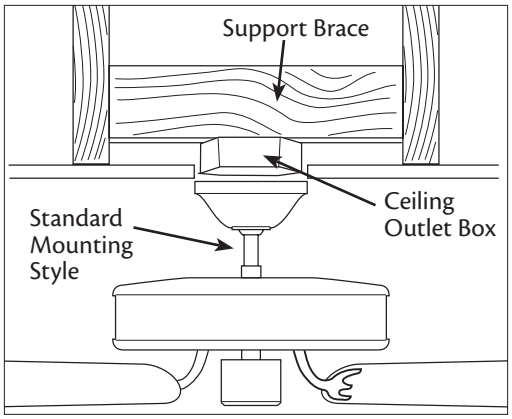

Standard Mounting hangs from the ceiling by a downrod (included).

Understanding Mounting and Installer's Choice®

Hunter's patented 3-position mounting system provides you maximum installation flexibility and ease. You can install your Hunter fan in one of three ways, depending on ceiling height and your preference: Low Profile, Standard, or Angled mounting. The steps in this manual include instructions for all three Installer's Choice mounting methods.

Considering Optional Accessories

Consider using Hunter's optional accessories, including a wall-mounted or remote speed control. To install and use the accessories, follow the instructions included with each product. For quiet and optimum performance of your Hunter fan, use only Hunter speed controls.

For ceilings higher than 8 feet, you can purchase Hunter extension downrods. All Hunter fans use sturdy 3/4" diameter pipe to assure stability and wobble-free performance.

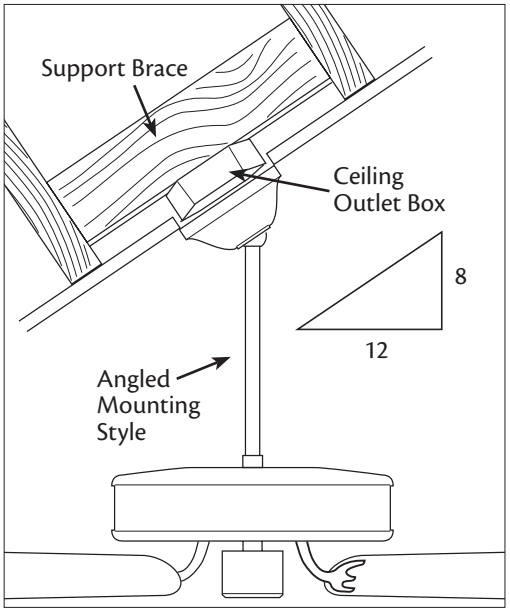

Angled Mounting recommended for a vaulted or angled ceiling

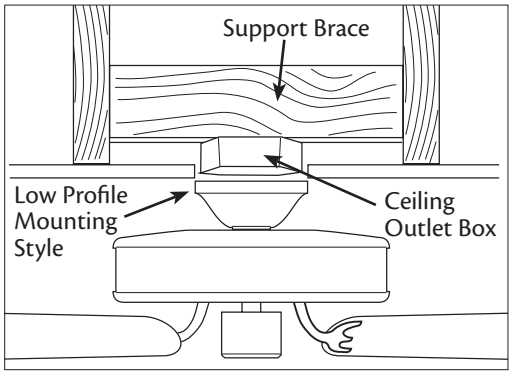

Low Profile Mounting fits close to the ceiling, recommended for ceilings less than 8 feet high

⚠ **CAUTION:** To reduce the risk of personal injury, attach the fan directly to the support structure of the building according to these instructions, and use only the hardware supplied.

1 • Getting Ready

To install a ceiling fan, be sure you can do the following:

- Locate the ceiling joist or other suitable support in ceiling.
- Drill holes for and install wood screws.
- Identify and connect electrical wires.
- Lift 40 pounds.

If you need help installing the fan, your Hunter fan dealer can direct you to a licensed installer or electrician.

Gathering the Tools

You will need the following tools for installing the fan:

- Electric drill with 9/64" bit
- Standard screwdriver (magnetic tip recommended)
- Phillips-head screwdriver (magnetic tip recommended)
- Wrench or pliers
- Ladder (height dependent upon installation site)

Checking Your Fan Parts

Carefully unpack your fan to avoid damage to the fan parts. Refer to the included Parts Guide. Check for any shipping damage to the motor or fan blades. If any parts are missing or damaged, contact your Hunter dealer or call Hunter Technical Support Department at 888-830-1326 (In Canada, call 866-268-1936).

Installing Multiple Fans?
If you are installing more than one fan, keep the fan blades and blade irons (if applicable) in sets, as they were shipped.

2 • Installing the Ceiling Plate

⚠ CAUTION: To avoid possible electrical shock, before installing your fan, disconnect the power by turning off the circuit breakers to the outlet box and associated wall switch location. If you cannot lock the circuit breakers in the off position, securely fasten a prominent warning device, such as a tag, to the service panel.

2-1. Drill two pilot holes into the wood support structure through the outermost holes in the outlet box. The pilot holes should be 9/64" in diameter.

For Angled Ceilings: Be sure to orient the ceiling plate so that the two tabs are pointing toward the ceiling peak.

2-2. Your fan comes with four preinstalled noise isolators. Check to make sure all four isolators are in place and were not removed during shipment.

2-3. Place a flat washer on each of the two 3" wood screws.

2-4. Thread the supply wires from the outlet box in the ceiling through the hole in the center of the ceiling plate.

2-5. Align the slotted holes in the ceiling plate with the pilot holes you drilled in the wood support structure. For proper alignment use slotted holes directly across from each other.

Note: The isolators should be flush against the ceiling.

2-6. Pass the screws through the slotted holes in the ceiling plate into the pilot holes you drilled.

Tighten the screws into the 9/64" pilot holes; do not use lubricants on the screws. Do not over tighten.

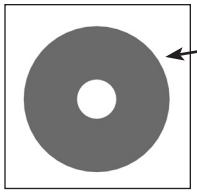

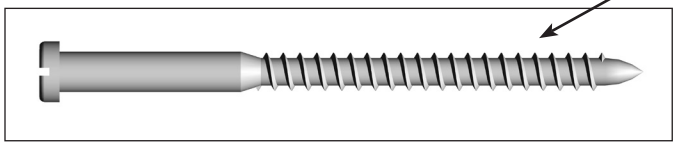

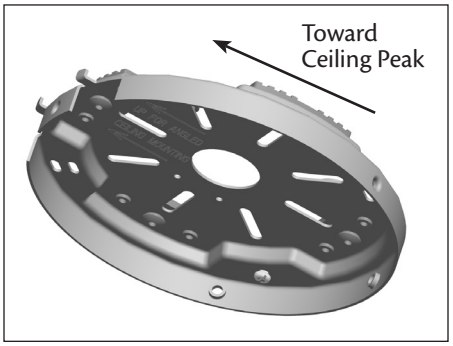

For Angled Ceilings: Be sure to orient the ceiling plate so that the two tabs are pointing toward the ceiling peak.

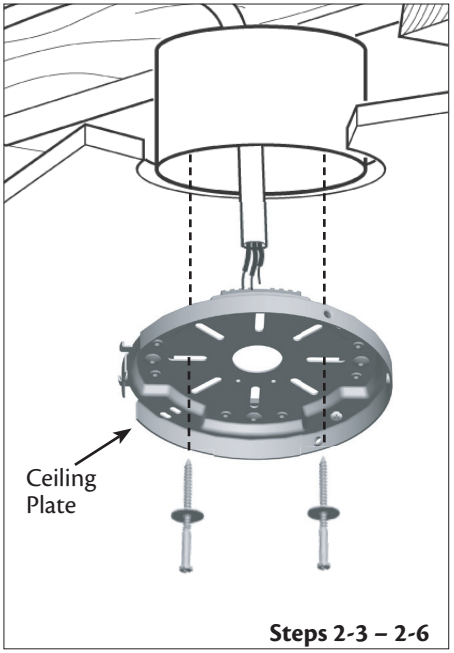

Steps 2-3 – 2-6

3 • Assembling and Hanging the Fan

⚠ WARNING: Fan may fall if not assembled as directed in these installation instructions.

3-1. Unbundle the wires from the fan.

For Standard or Angled mounting:

3-2. Insert the downrod through the canopy and canopy trim ring. Feed the wires from the fan through the downrod on one side of the pin in the ball.

3-3. Loosen the square head setscrew on the adapter to install the pipe and ball assembly. **Note:** When the pipe and ball assembly is fully installed, 2-3 threads on the pipe will still be visible; this is normal. Securely retighten the setscrew with a wrench or pliers. Skip to step 3-7.

⚠ CAUTION: The adapter has a special coating on the threads. Do not remove this coating; the coating prevents the downrod from unscrewing. Once assembled, do not remove the downrod.

For Low Profile mounting:

Note: For low profile mounting, the downrod is replaced with the low profile washer.

3-4. Remove the setscrew from the adapter.

3-5. Place the low profile washer into the canopy with the lip down.

3-6. Align the holes in the washer with the holes in the adapter. Assemble securely with three low profile screws.

Hanging the Fan:

Note: To hang the fan, you must tilt the canopy to an almost vertical position so that the canopy slots sit on the ceiling plate hooks.

3-7. Raise the fan and align the slots in the canopy with the hooks on the ceiling plate.

3-8. Place the slots over the hooks to hang the fan.

Standard or Angled Mounting

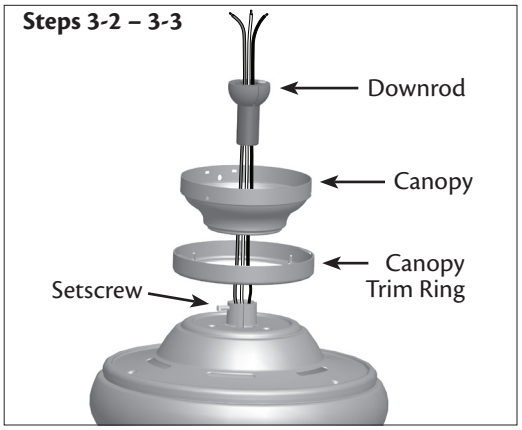

Low Profile Mounting

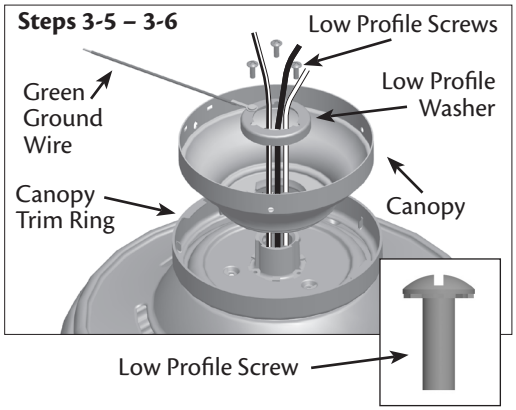

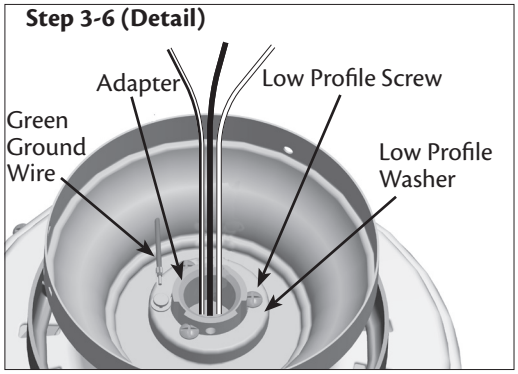

4 • Wiring the Fan

All wiring must be in accordance with national and local electrical codes and ANSI/NFPA 70. If you are unfamiliar with wiring, use a qualified electrician.

Wall switches are not included. Select an acceptable general-use switch in accordance with national and local electrical codes.

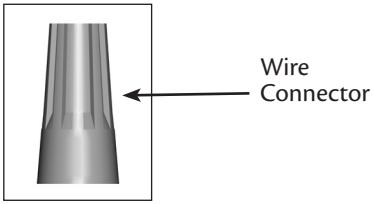

4-1. Before attempting installation, make sure the power is still off.

4-2. To connect the wires, hold the bare metal leads together and place a wire connector over them, then twist clockwise until tight. For all these connections use the wire connectors provided.

4-3. Connect the bare or green ground wire (grounding) from the ceiling to the green ground wire (grounding) from the ceiling plate and the green ground wire (grounding) from the fan. If you chose the low profile option, the green ground wire from the fan can be found on the low profile washer.

4-4. Connect the white wire (grounded) from the ceiling to the white wire (grounded) from the fan.

4-5. Connect the remaining wires as follows:

Dual Switch Wiring:

- The black wire (ungrounded) from the ceiling to the black wire (ungrounded) from the fan
- The black wire with a white stripe (ungrounded) from the fan to the wire (ungrounded) for the wall switch

Single Switch Wiring:

- The black wire (ungrounded) from the ceiling to the black (ungrounded) and the black wire with a white stripe (ungrounded) from the fan

Dual Switch Wiring

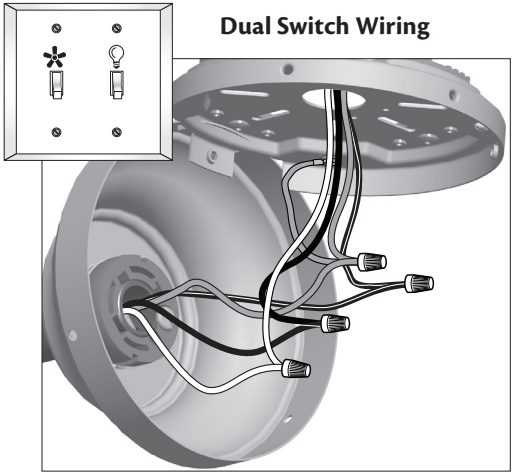

Single Switch Wiring

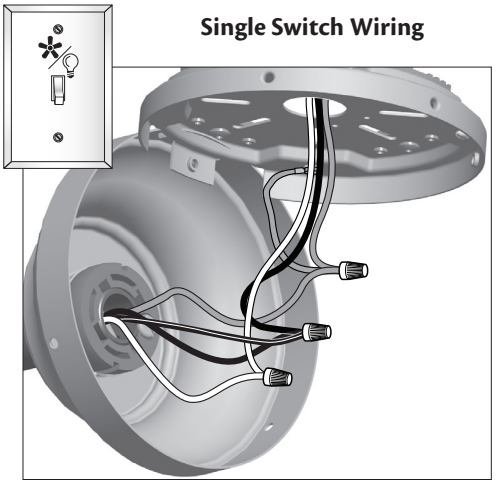

⚠ CAUTION: Be sure no bare wire or wire strands are visible after making connections.

4-6. Turn the splices upward and push them carefully back through the ceiling plate into the outlet box.

4-7. Spread the wires apart, with the grounded wires on one side of the outlet box and the ungrounded wires on the other side of the outlet box.

5 • Installing the Canopy and Canopy Trim Ring

⚠ **WARNING:** Failure to complete the following steps could cause the fan to fall.

Note: It is recommended you use a magnetic tip screwdriver for the following steps.

5-1. Rotate the hanger ball so the tab in the canopy is secure in the hanger ball groove. **Note:** Your fan may have multiple tabs and grooves that must be aligned.

5-2. Swing the fan up to align the canopy screw holes with the mounting holes on the ceiling plate.

⚠ **WARNING:** The slots in the canopy must remain engaged while swinging the canopy for alignment.

5-3. Holding the canopy up with the screw holes aligned, partially install two canopy screws into the holes opposite the ceiling plate tabs.

5-4. Partially install a canopy screw into the hole between the two ceiling plate tabs.When all the holes are properly aligned, securely tighten all three canopy screws.

5-5. Verify that the tabs in the canopy are still in the grooves of the hanger ball.

5-6. Align the tabs on the trim ring opposite the grooves in the hanger ball. Using both hands, push the canopy trim ring up to the top of the canopy. The canopy trim ring will snap and lock into place.

Note: Should you need to remove the trim ring, press firmly on opposite sides of the trim ring directly above the groove in the hanger ball. The tabs will flex out releasing the canopy trim ring.

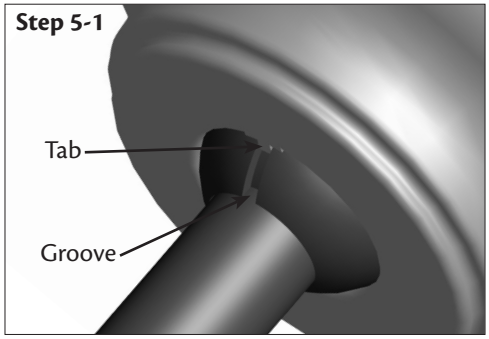

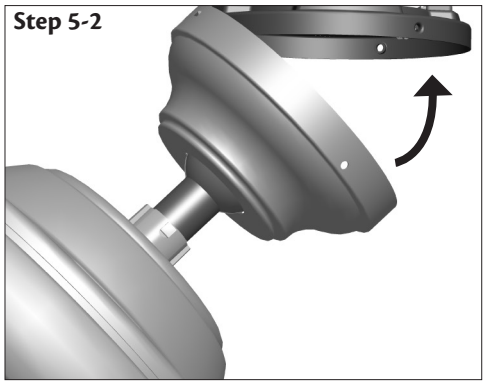

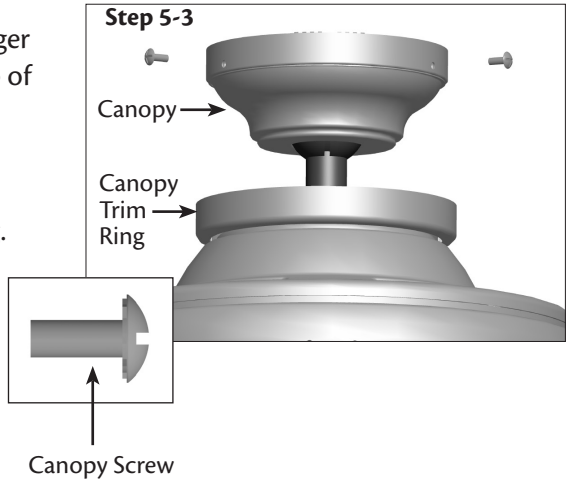

6 • Assembling the Blades

Hunter fans use several styles of fan blade irons (brackets that hold the blade to the fan).

6-1. Your fan may include blade grommets. If your fan has grommets, insert them by hand into the holes on the blades.

6-2. Attach each blade to a blade iron using three blade assembly screws. If you used grommets, the blades may appear slightly loose after screws are tightened. This is normal.

6-3. Remove the blade mounting screws and rubber shipping bumpers from the motor. **Note:** Some blade mounting screws are installed in the motor to secure shipping blocks.

6-4. For each blade, insert one blade mounting screw through the blade iron, and attach lightly to the fan. Insert the second blade mounting screw, then securely tighten both mounting screws.

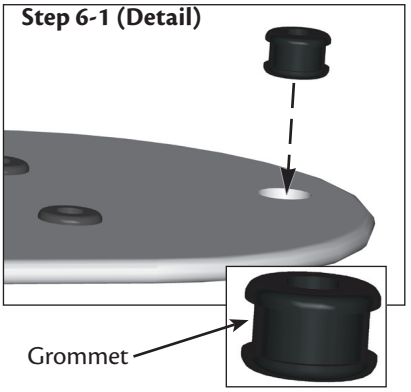

Note: The blades on this fan have been treated with Hunter's Dust Armor protection, making the blades less likely to attract dust and dirt. Use a dry or slightly damp lint free cloth to clean the blades. Do not use a furniture polish or any other cleaners that leave any residue, as they will damage the protective Dust Armor on the blades.

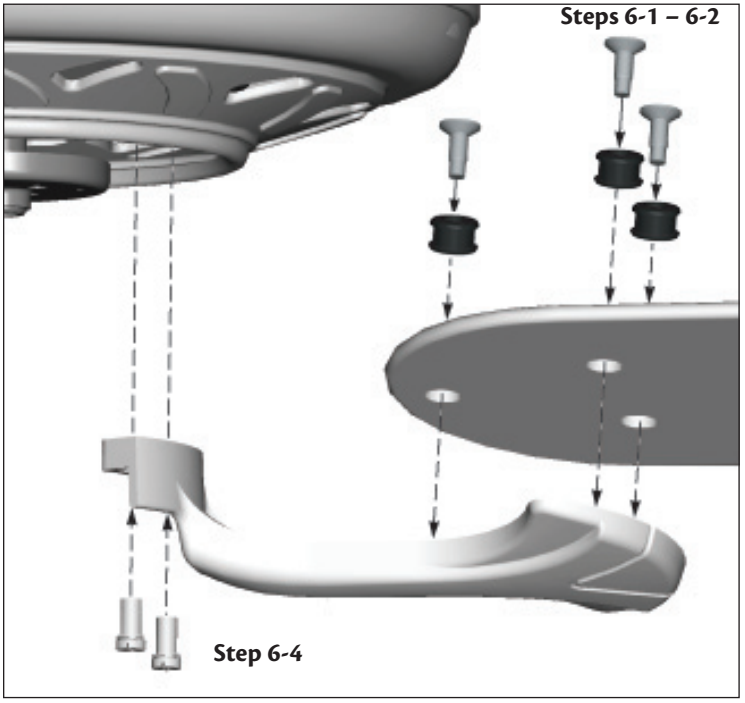

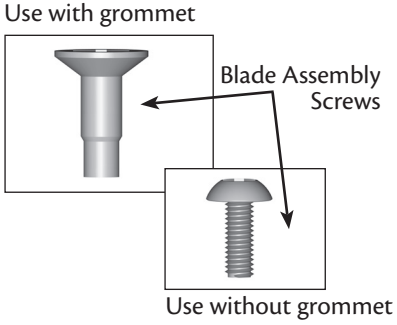

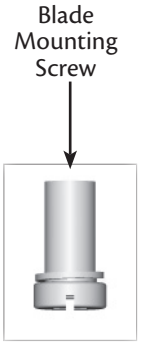

7 • Completing Your Installation With a Multi-Staked Light Fixture

7-1. Connect the white wire from the lower switch housing to the white wire from the fan. Connect the black/white wire from the lower switch housing to the black wire from the fan.

Note: Both plug connectors are polarized and will only fit together one way. Make sure the connectors are properly aligned before connecting them. Incorrect connection could cause improper operation and damage to the product.

7-2. Place the lower switch housing assembly over the upper switch housing. Align the side screw holes in the upper and lower switch housings. Attach the lower switch housing to the upper switch housing with three housing assembly screws.

7-3. To install each shade, first loosen the three thumbscrews.

7-4. Raise the shade to the light fixture. Tighten the thumbscrews securely.

7-5. Install B10 candelabra-based light bulbs (60 Watt maximum each).

Note: Glass shade style and number of lights may vary.

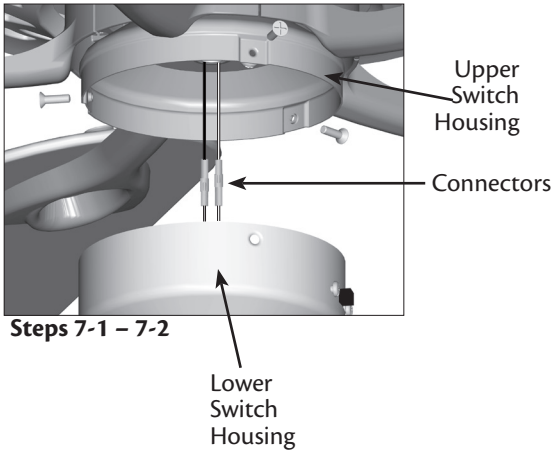

Steps 7-1 – 7-2

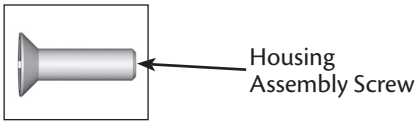

Note: In compliance with US federal energy regulations, this ceiling fan contains a device that restricts its light output. Exceeding the wattage limit marked on the MAX wattage sticker affixed to the light socket(s) may result in fire hazard or improper operation.

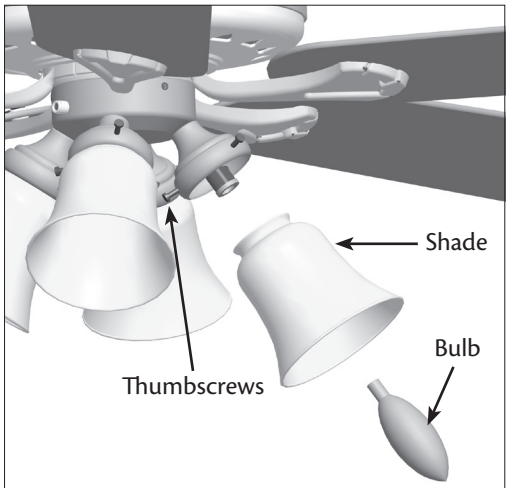

Steps 7-4 – 7-5

8 • Operating and Cleaning Your Ceiling Fan

8-1. Turn on electrical power to the fan.

8-2. The fan pull chain controls power to the fan. The pull chain has four settings in sequence: High, Medium, Low and Off.

- Pull the chain slowly to change settings.
- Release slowly to prevent the chain from recoiling into the blades.
- The chain uses a breakaway connector that separates if the chain is jerked. If this happens, simply reinsert the chain into the connector.

8-3. The light pull chain controls power to the light. The pull chain has two settings: On and Off.

8-4. Ceiling fans work best by blowing air downward (counterclockwise blade rotation) in warm weather to cool the room with a direct breeze. In winter, having the fan draw air upward (clockwise blade rotation) will distribute the warmer air trapped at the ceiling around the room without causing a draft.

8-5. The blades on this fan have been treated with Hunter's Dust Armor protection, making the blades less likely to attract dust and dirt. Use a dry or slightly damp lint free cloth to clean the blades. Do not use a furniture polish or any other cleaners that leave any residue, as they will damage the protective Dust Armor on the blades.

8-6. For cleaning finishes, use a soft brush or lint-free cloth to prevent scratching. A vacuum cleaner brush nozzle can remove heavier dust. Remove surface smudges or accumulated dirt and dust using a mild detergent and a slightly dampened cloth. You may use an artistic agent, but never abrasive cleaning agents as they will damage the finish.

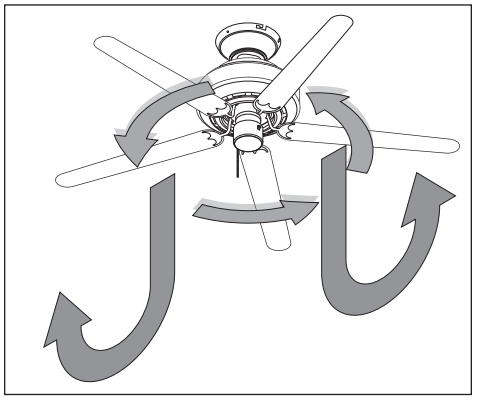

In warm weather, use downward air flow pattern

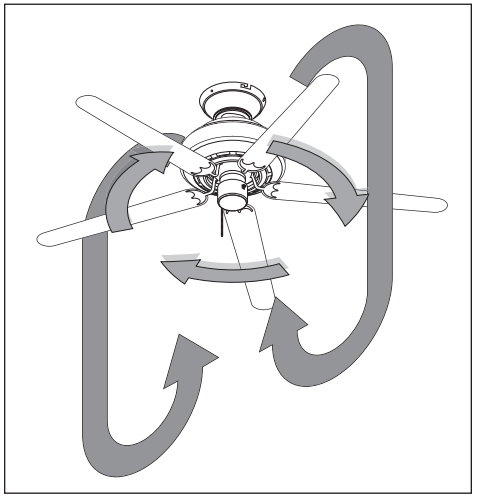

In cold weather, use upward air flow pattern

To Change Airflow Direction

Turn the fan off and let it come to a complete stop. Slide the reversing switch on the fan to the opposite position. Restart fan.

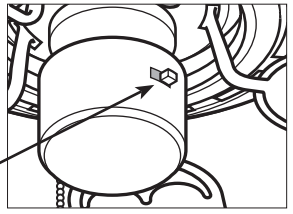

9 • Troubleshooting

Problem: Nothing happens; fan does not move

1. Turn power on, replace fuse, or reset breaker.
2. Loosen canopy, check all connections according to the wiring the fan section.
3. Check the plug connection in the switch housing.
4. Push motor reversing switch firmly left or right to ensure that the switch is engaged.
5. Pull the pull chain to ensure it is on.
6. Remove the shipping bumpers.

Problem: Noisy operation

1. Tighten the blade assembly screws and blade iron armature screws until snug.
2. Check to see if the blade is cracked. If so, replace all the blades.

Problem: Excessive wobbling

1. Make sure the blades are securely attached to the blade irons according to the blade assembly instructions provided.
2. After thoroughly verifying the blades are securely attached to the blade irons, follow the instructions in the enclosed balancing kit to balance the fan.
3. Turn power off, support fan very carefully, and check that the hanger ball is properly seated.

Problem: Lights shut off suddenly, but fan is still operating

1. Check to make sure the wattage and type of the light bulbs that are installed meet the specifications on the light socket.
2. Turn the power to the fan off at the wall switch. Wait 5 minutes, then resume power to the fan.

Problem: CFL bulbs flicker when controlled by a dimming remote or wall control

1. CFL light bulbs are not usually made for dimming. Replace the CFL bulbs with dimmable light bulbs, or install the fan in a location without a dimming control.

If you need parts or service assistance, please call 888-830-1326 (In Canada, call 866-268-1936) or visit us at our Web site at http://www.hunterfan.com.

Hunter Fan Company
7130 Goodlett Farms Parkway #400
Memphis, Tennessee 38016