LILLIPUT 44"



51137 | Brushed Nickel Body with Light Gray Oak Blades

DIMENSIONS

Measured in inches

A. 11.57 (Angled 43.57, Flush 9.57)
B. 16.81 (Angled 48.81, Flush 14.81)
C. 6.5
D. 8.3

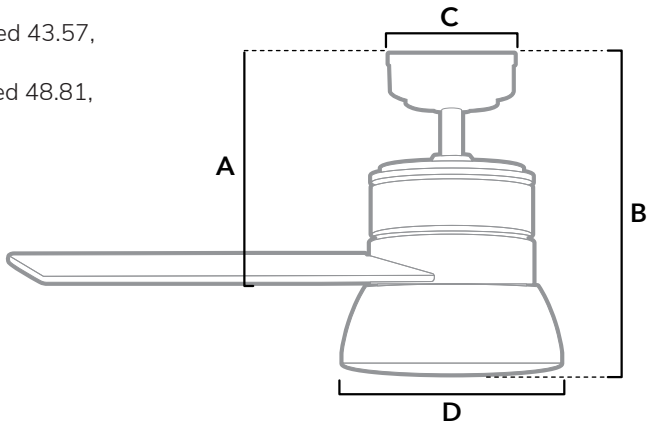

ADDITIONAL FINISHES



51139
Matte Black Body with Salted Black or Matte Black Blades

FAN SPECIFICATIONS

Motor Type	Reversible	Wire Length	Control Type	Downrod	Location	Blade #	Add'l Sizes
AC	YES	32" (24" Downrod)	Pull Chains	4 Included	Indoor	5	52"

AIRFLOW AND LIGHT SPECIFICATIONS

AVG Airflow	Airflow Efficiency	CFM High	Voltage	Bulbs Included	Output Per Bulb	Watts Per Bulb	Bulb Type	Base Type	LED Light Kit	CRI	CCT (Kelvins)	Dimmable
2972	78	4524	120v/60Hz	2	600	7W	LED	E26	Yes	80	3,000	NO

Higher Air Velocity

WhisperWind® AC Motor

Indoor Rated

Pull Chains



99779 Accessory Wire Kit

LIMITED LIFETIME MOTOR WARRANTY

ETL LISTED US Intertek

140 YEARS OF QUALITY: Cutting-edge technology, American engineered, and ETL/UL tested for the highest safety standards — All backed by a limited lifetime motor warranty for peace of mind.

*Based on testing conducted January 2023 comparing the average high-speed airflow velocity of Hunter SureSpeed ceiling fans and the best-selling online models for leading competitors.

FASTER COOLING POWER®



FEEL COOLER, **INSTANTLY.**

Precision Blades.
Aerodynamic design, uniflow airflow.

Light Powerful Motor.
Whisper-quiet, energy efficient.

Faster Air. Cooler You.
Powerful airflow with instant AHHHHH...

*Based on testing conducted January 2023 comparing the average high-speed airflow velocity of Hunter SureSpeed ceiling fans and the best-selling online models for leading competitors.