ELEVÉ COMFORT™ 5 BLADE INDOOR M5 52"



52333 | Fresh White Body with Fresh White or Light Oak Blades

DIMENSIONS

Measured in inches

A. 10.45 (Angled 42.45, Flush 10.45)
B. 12.43 (Angled 44.43, Flush 12.43)
C. 6.48
D. 7.13

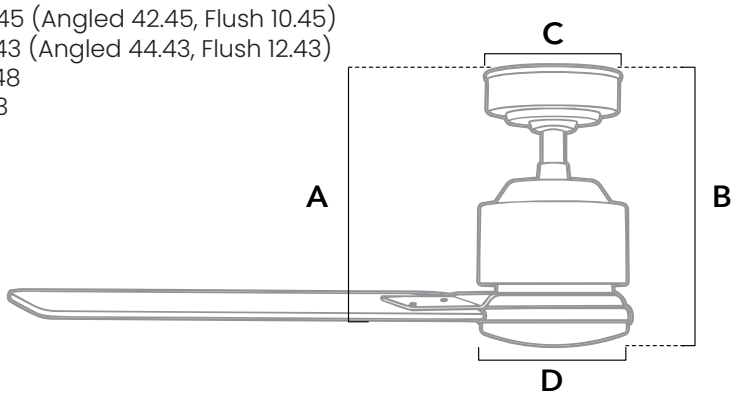

ADDITIONAL FINISHES



52332 | Matte Black Body with Matte Black or Dark Grey Oak Blades

FAN SPECIFICATIONS

Motor Type	Reversible	Wire Length	Control Type	Downrod	Location	Blade #	Add'l Sizes
DC	YES	32" (24" Downrod)	Handheld Remote	4" Incl.	Indoor	5	N/A

AIRFLOW AND LIGHT SPECIFICATIONS

AVG Airflow	Airflow Efficiency	CFM High	Voltage	Bulbs Included	Output Per Bulb	Watts Per Bulb	Bulb Type	Base Type	LED Light Kit	CRI	CCT (Kelvins)	Dimmable
3046	156	4393	120v/60Hz	1	1700	18W	LED	N/A	Module	80	3-6000	Yes

Integrated LED Module

Handheld Remote

Energy Efficient DC Motor

Indoor Rated

2 YEAR MOTOR WARRANTY
1-Year Parts Warranty

ETL LISTED US
Intertek

RELIABLE COMFORT: ETL/UL tested for trusted safety and backed by a 2-year DC motor warranty and a 1-year parts warranty.