

Seattle

Installation Manual

Model: 50738 Noble Bronze
Fan weight ±2 lbs: 16.1 lbs (7.3 kg)

Hunter

©2020 Hunter Fan Co.

PG3916 r071620

Congratulations on purchasing your new Hunter® ceiling fan!

The ceiling fan you purchased will provide comfort and performance in your home or office for many years. This instruction manual contains complete instructions for installing and operating your fan. We are proud of our work and appreciate the opportunity to supply you with the best ceiling fan available anywhere in the world.

We are here to help!

This Instruction Manual is designed to make installation as simple as possible. While working through this Instruction Manual, keep your smartphone or tablet nearby. We have added video links to help you through the more technical sections. If you are unfamiliar or uncomfortable with wiring, contact a qualified electrician. We also provide telephone support at 1.888.830.1326 or visit us at HunterFan.com.

READ and SAVE These Instructions

⚠ WARNING



Warning

w.1 - To reduce the risk of fire, electrical shock, or personal injury, mount fan directly from building structure and/or an outlet box marked acceptable for fan support of 70 lbs (31.8 kg) and use the mounting screws provided with the outlet box.

w.2 - To avoid possible electrical shock, before installing or servicing your fan, disconnect the power by turning off the circuit breakers to the outlet box and associated wall switch location. If you cannot lock the circuit breakers in the off position, securely fasten a prominent warning device, such as a tag, to the service panel.

w.3 – To reduce the risk of electric shock, this fan must be installed with an isolating wall control/switch.

w.4 - To reduce the risk of personal injury, do not bend the blade brackets when installing the blade brackets, balancing the blades, or cleaning the fan. Do not insert foreign objects in between rotating fan blades.

Caution

c.1 - All wiring must be in accordance with national and local electrical codes ANSI/NFPA 70. If you are unfamiliar with wiring, use a qualified electrician.

c.2 - Use only Hunter replacement parts.

This equipment has been tested and found to comply with the limits for a Class B digital device, pursuant to part 15 of the FCC Rules. These limits are designed to provide reasonable protection against harmful interference in a residential installation. This equipment generates, uses and can radiate radio frequency energy and if not installed and used in accordance with the instructions may cause harmful interference to radio communications.

However, there is no guarantee that interference will not occur in a particular installation. If this equipment does cause harmful interference to radio or television reception, which can be determined by turning the equipment off and on, the user is encouraged to try to correct the interference by one or more of the following measures:

- Reorient or relocate the receiving antenna.
- Increase the separation between the equipment and receiver.
- Connect the equipment into an outlet on a circuit different from that to which the receiver is connected.
- Consult the dealer or an experienced radio/TV technician for help.

Caution: modifications not approved by the party responsible for compliance could void user's authority to operate the equipment.

This device complies with Part 15 of the FCC Rules. Operation is subject to the following two conditions: (1) This device may not cause harmful interference, and (2) this device must accept any interference received, including interference that may cause undesired operation.

This product conforms to UL Standard 507.

Here are the tools you'll need to complete your installation:



Ladder



Screwdriver



Pliers



Wire Strippers

OPTIONAL

If mounting to a support structure, you will also need these tools.



Drill



9/64" Drill Bit

© 2020 Hunter Fan Company
7130 Goodlett Farms Pkwy, Suite 400
Memphis TN 38016

Here is what comes in your box:

We recommend that you pull everything out of the box and lay it out. We have grouped the drawn components below with the hardware you'll need for those parts. The screws below are drawn to scale to make it easier to identify what piece of hardware is needed to install each component.

Hunter Pro Tip:

Do not discard the hardware bags or mix parts from different bags. Make note of the symbol printed on each hardware bag. The symbols can be used to identify the appropriate hardware for each step.

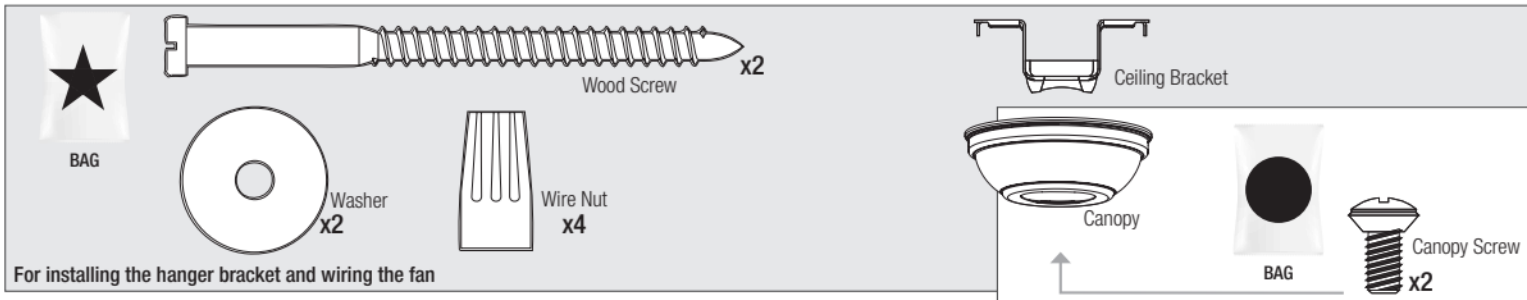

For installing the hanger bracket and wiring the fan

For installing the canopy

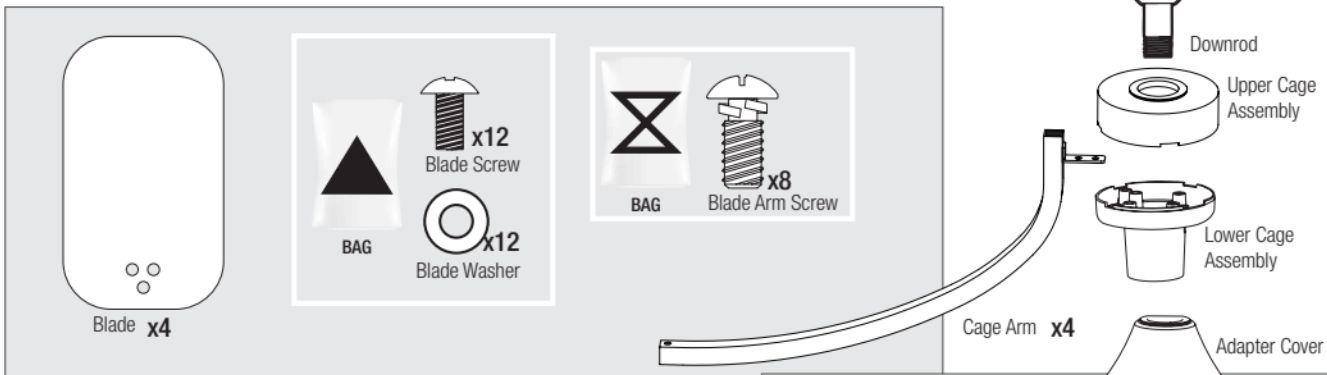

For installing the blades

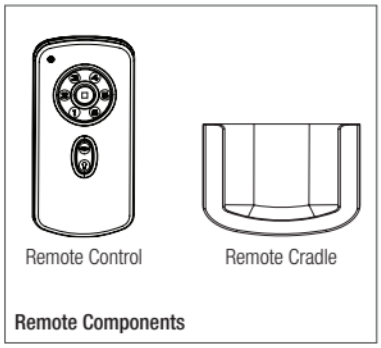

Remote Components

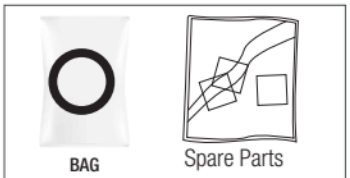

For your convenience, you may receive extra fasteners.

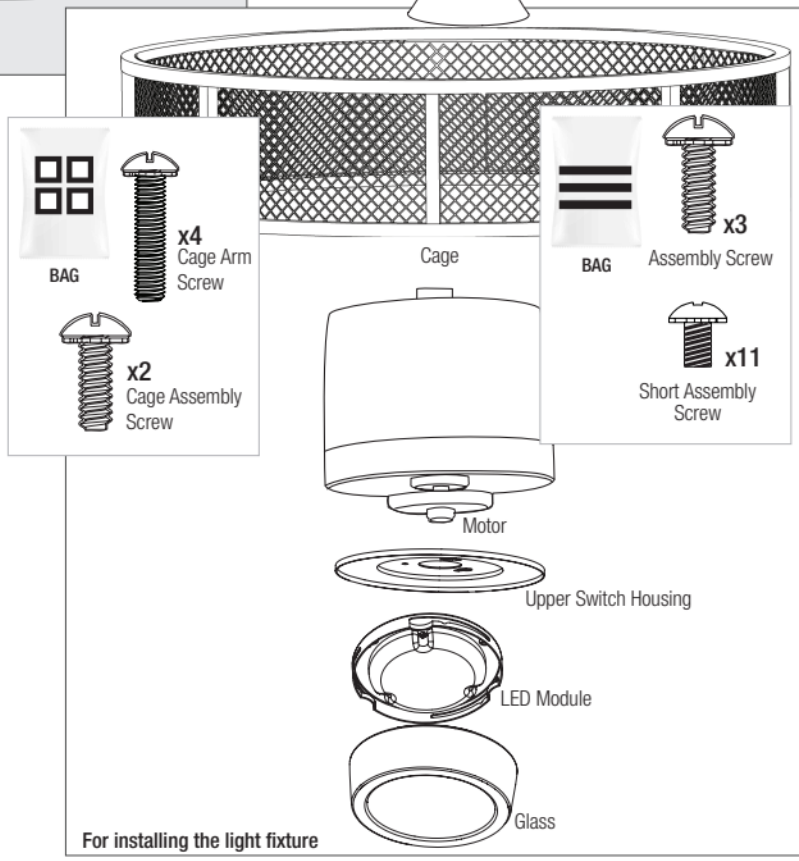

For installing the light fixture

Note:

Fan style may vary.

Find a part that is missing or damaged?

Don't take it back to the store. Let us make it right. Visit us at HunterFan.com or call us at 1.888.830.1326.

Choosing the Right Installation Location

You probably bought this fan with a location in mind. Let's check below to make sure it is a good fit.

Check the room dimensions:

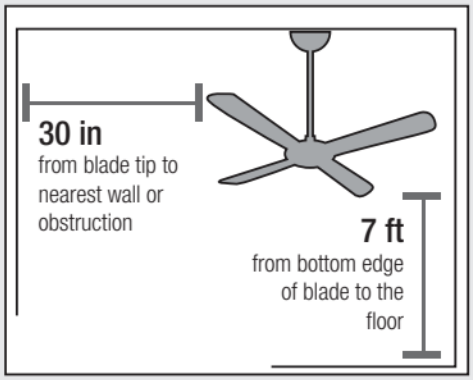

Check the outlet box:

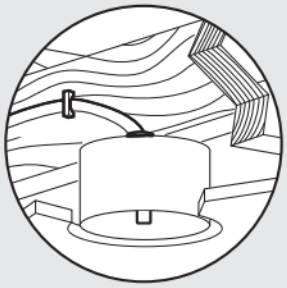

You must be able to secure the fan to building structure or fan-rated outlet box.

Checking the Ceiling Angle:

Standard Mounting

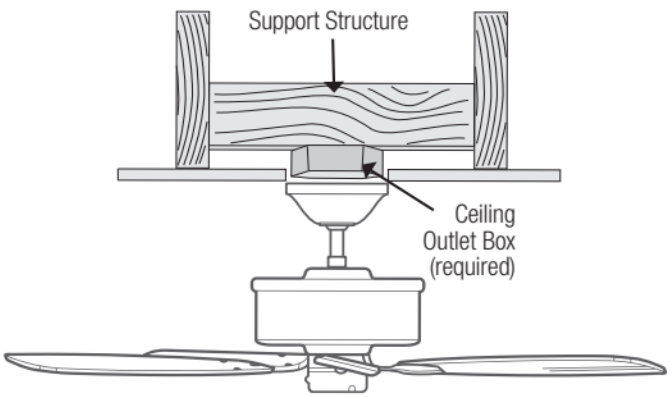

If you have a flat ceiling:

Hang your fan by a standard downrod. Some fans come with a shorter downrod for a Low Profile installation.

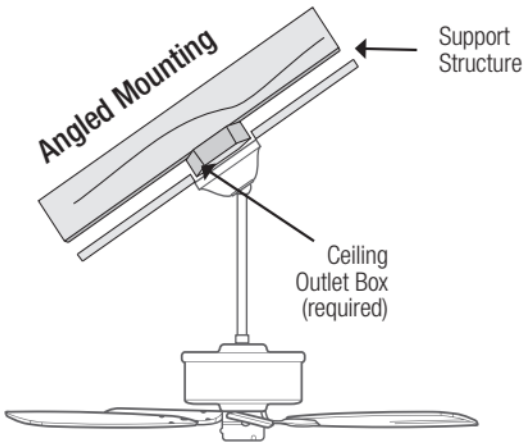

If you have an angled or vaulted ceiling:

1. You will need a longer downrod. (Sold separately at HunterFan.com)
2. If your ceiling angle is greater than 30°, you will also need an Angled Mounting Kit. (Sold separately at HunterFan.com)

Angled Mounting

A little more information on Angled Mounting:

For optimum performance and appearance, a longer downrod should be used with your Hunter ceiling fan when installing on high or angled ceiling. If your ceiling is angled greater than 30° you will also need an Angled Mounting Kit. Longer downrods and the Angled Mounting Kit are sold separately at HunterFan.com.

Hunter Pro Tip:

Determining if you need an Angled Mounting Kit:

Fold on the dotted line. Place edge against the wall. Slide towards the ceiling.

If the guide touches the wall but not the ceiling, you need an angled mounting kit.



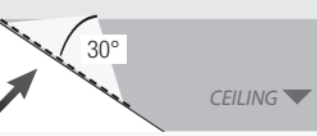

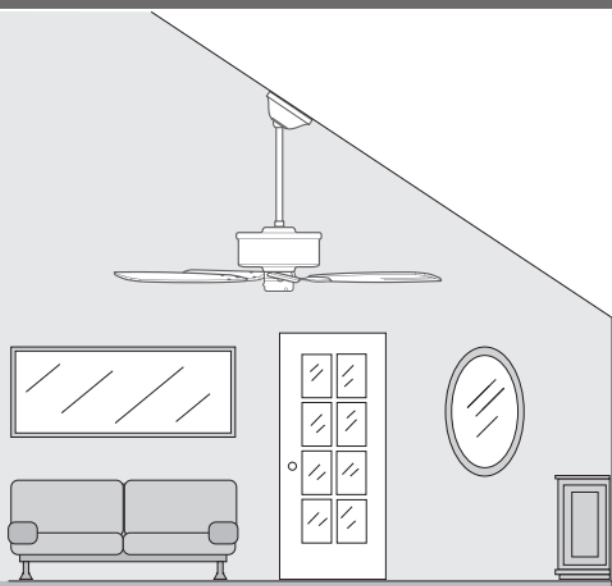

Installing the Ceiling Bracket

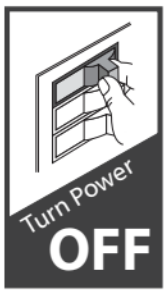

You have **two options** for installation. Pick which one works best for your location. Remove any existing bracket prior to installation. **Only use the provided Hunter ceiling bracket that came in your fan's box.**

Do this first!

Hunter Pro Tip:

The machine screws are the ones that came with your outlet box.

Option 1:
Machine Screws

Use machine screws *(provided with outlet box)* and washers when securing to existing ceiling fan-rated outlet box. Make sure it is securely installed and is acceptable for fan support of 31.8 kg (70 lbs) or less.

ANGLED MOUNTING TIP

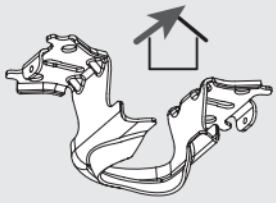

For angled ceilings, point opening toward peak.

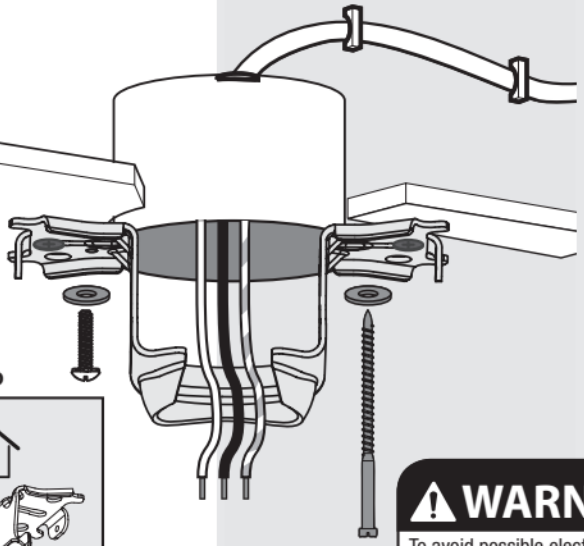

Option 2:
Wood Screws

Use wood screws and washers (included) when securing to support structure with approved electrical outlet box. Drill 9/64" pilot holes in support structure to aid in securing ceiling bracket with hardware found in the ★ hardware bag.

⚠ WARNING

To avoid possible electrical shock, before installing your fan, disconnect the power by turning off the circuit breakers to the outlet box associated with the wall switch location.



Installing the Cage Assembly

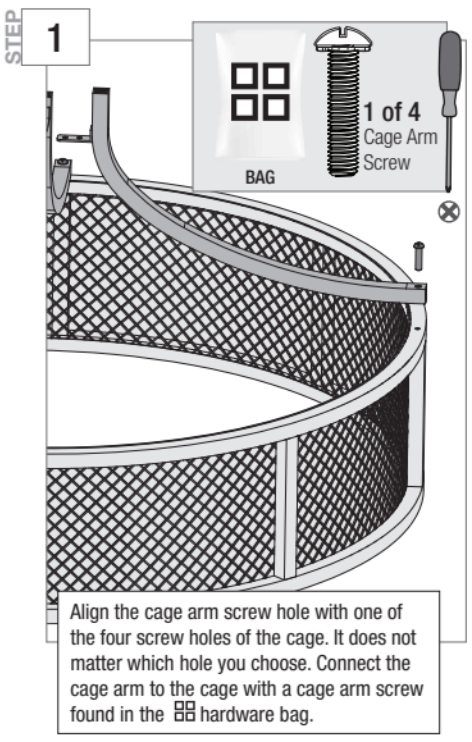

Align the cage arm screw hole with one of the four screw holes of the cage. It does not matter which hole you choose. Connect the cage arm to the cage with a cage arm screw found in the ⊞ hardware bag.

Repeat x4

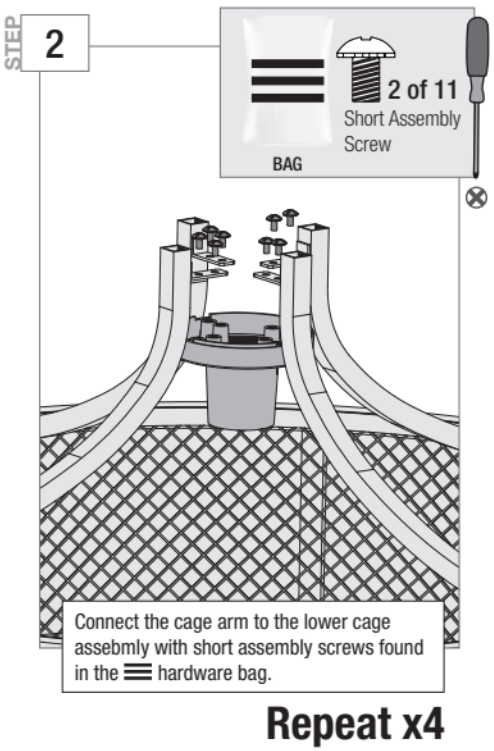

Connect the cage arm to the lower cage assebmly with short assembly screws found in the 〓 hardware bag.

Repeat x4

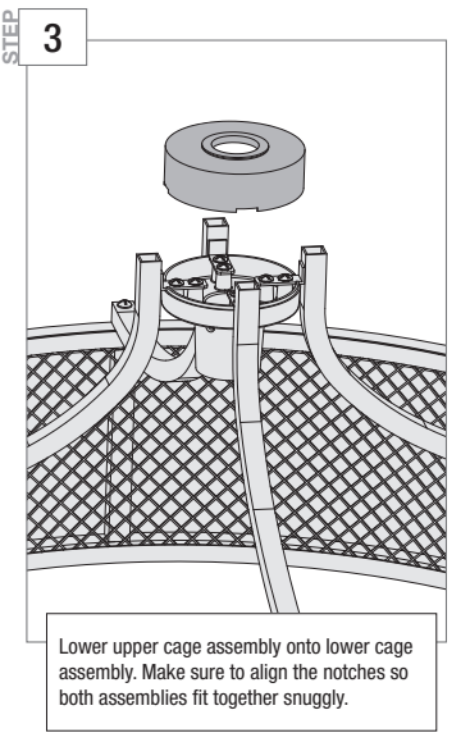

Lower upper cage assembly onto lower cage assembly. Make sure to align the notches so both assemblies fit together snuggly.

Installing the Downrod

Follow below if you are using the downrod that came pre-assembled in your box. Need to install a longer downrod? Check out the guide at the end of this manual.

STEP 1

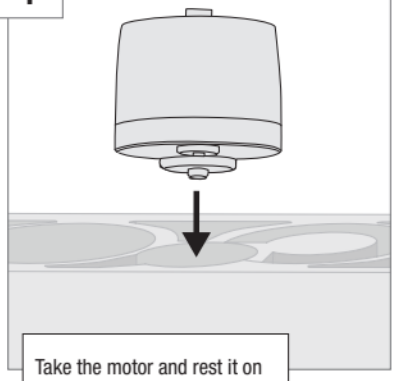

Take the motor and rest it on top of the styrofoam insert.

STEP 2

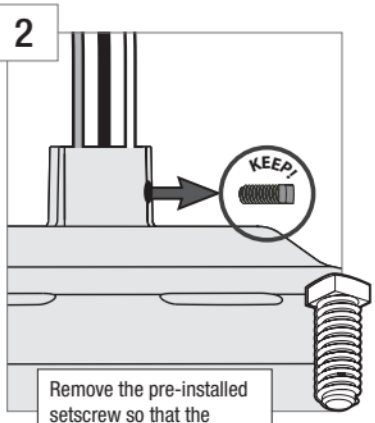

Remove the pre-installed setscrew so that the downrod can be inserted.

STEP 3

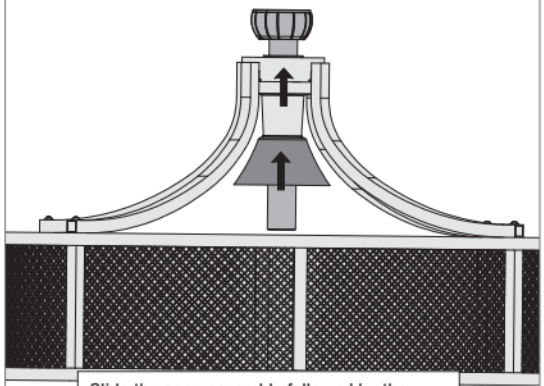

Slide the cage assembly followed by the adapter cover onto the downrod.

STEP 4

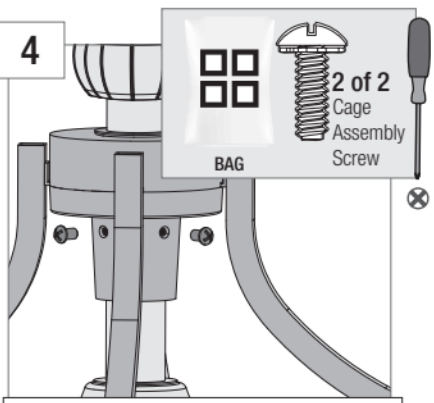

Insert and lightly tighten both cage assembly screws, found in the hardware bag ⊞, into the cage assembly. These screws when tightened will hold the cage assembly in place on the downrod.

STEP 5

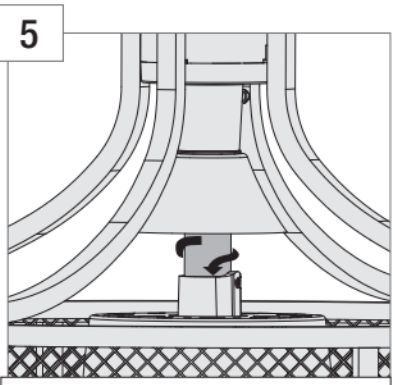

Pass all wires to one side of horizontal bar in downrod assembly. Hand tighten the downrod (at least 4–5 full turns) until it stops.

Hunter Pro Tip:

The ground wire attached to the downrod is approximately 8 inches.

STEP 6

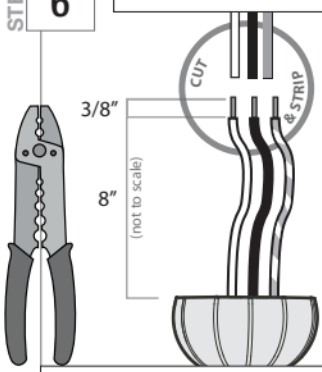

The wires can be cut, but leave at least 8" extending from the top of the downrod.

STEP 7



Tighten the setscrew with pliers. **DO NOT HAND TIGHTEN.**

STEP 8

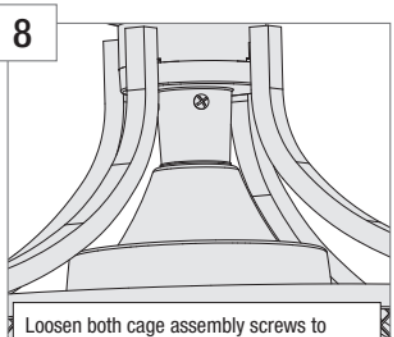

Loosen both cage assembly screws to lower the cage assembly and the adapter cover until the adapter cover rests flush against the motor housing. Retighten both cage assembly screws.

⚠ WARNING

FAN FALL HAZARD

To prevent **SERIOUS INJURY** or **DEATH:**

- **ALWAYS** tighten setscrew with pliers.
- **DO NOT** hand tighten setscrew.
- **CHECK** the setscrew is tight using pliers each time you change fan direction.

Hanging the Fan

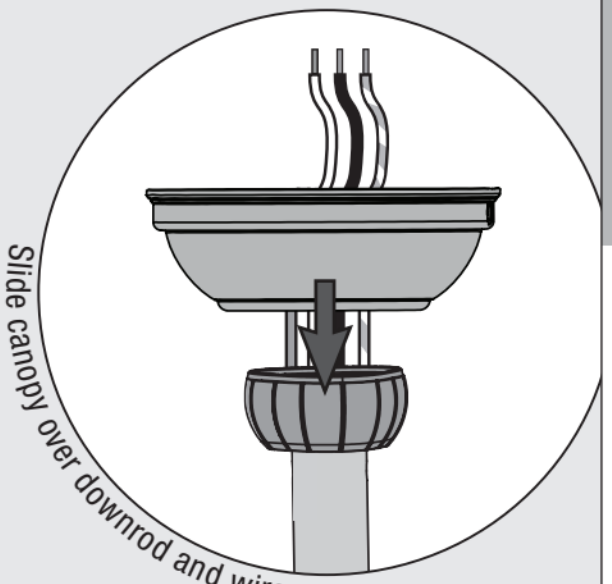

Note:

Fan style may vary.

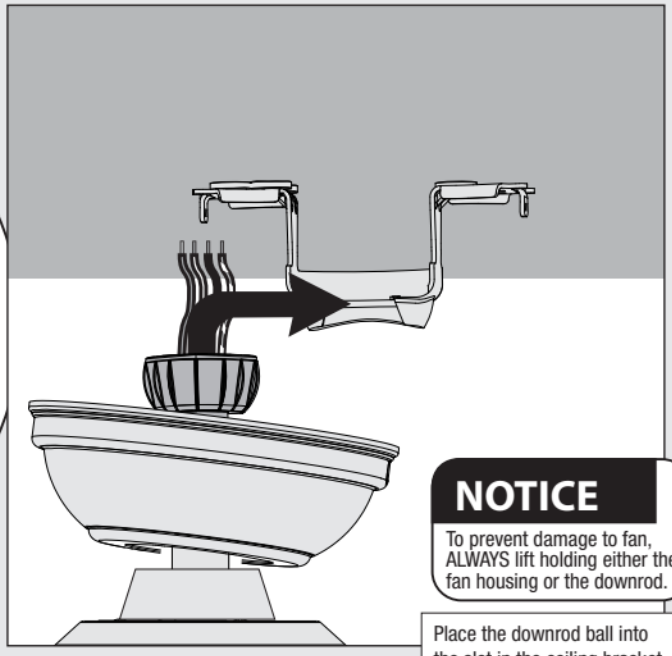

NOTICE

To prevent damage to fan, ALWAYS lift holding either the fan housing or the downrod.

Place the downrod ball into the slot in the ceiling bracket.

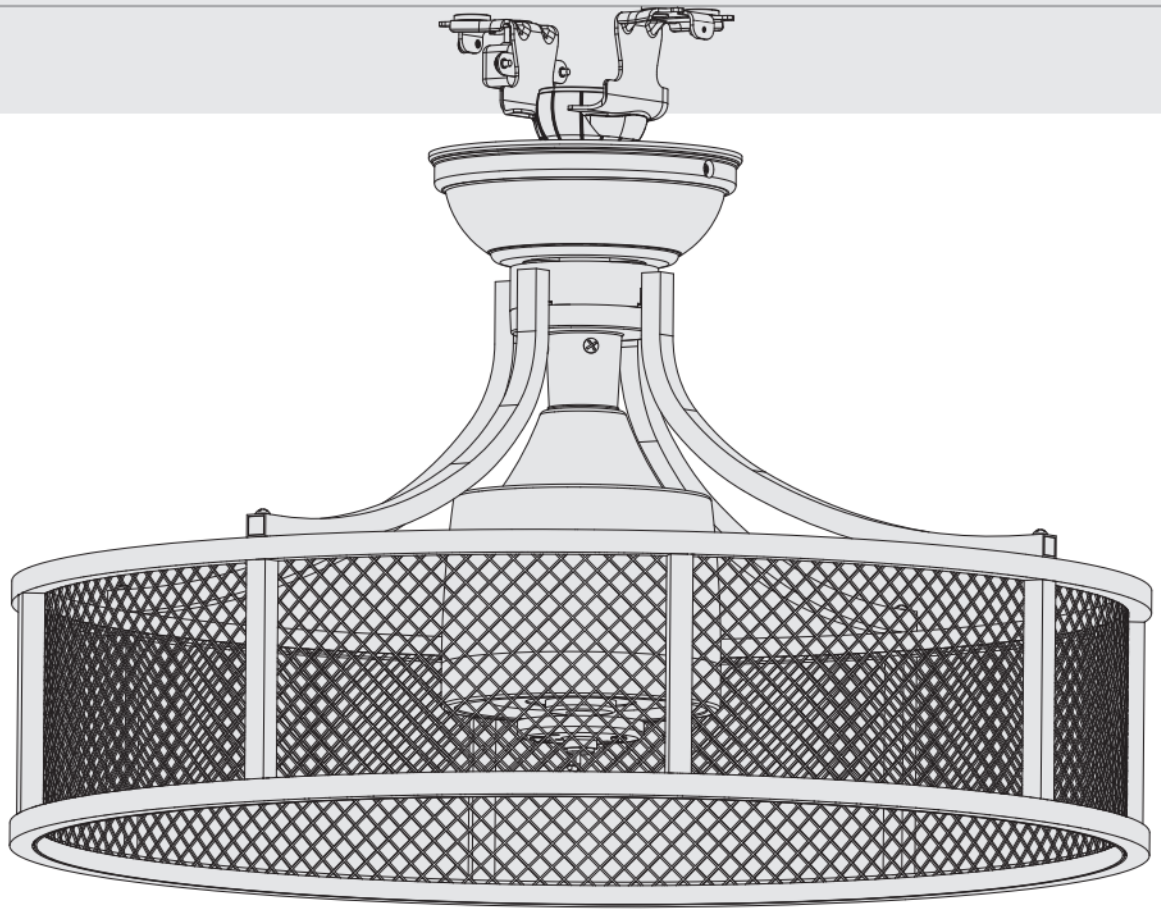

We know wiring is hard. Let's make it easier.

Follow these steps to get your fan wired quickly and safely. Follow the route below that best matches your wall switch setup. If you are unfamiliar with wiring or uncomfortable doing it yourself, please contact a qualified electrician.

You are going to need these:

4 Wire Nuts (these are in the ★ bag)

Hunter Pro Tip:

Here is how to connect the wires:
Push the bare metal ends of the wires together and slide a wire nut over them. Then, twist the wire nut clockwise until tight. **Give it a gentle pull to make sure none of the wires are loose.**

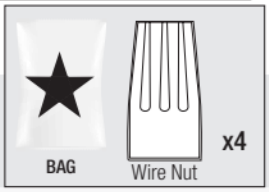

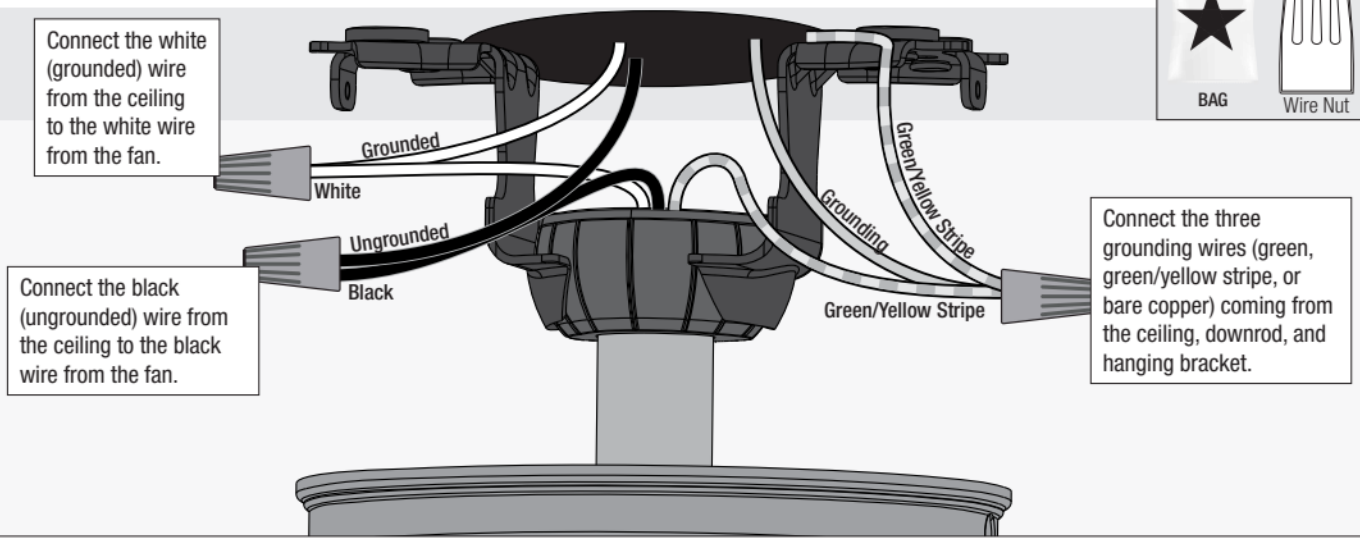

⚠ WARNING

All wiring must be in accordance with national and local electrical codes ANSI/NFPA 70. If you are unfamiliar with wiring or in doubt, consult a qualified electrician.

⚠ WARNING

The ceiling fan must be grounded. If the ground wire for the installation site is not present, immediately **STOP** installation and consult a qualified electrician.

Hunter Pro Tip:

Have extra wiring?
Turn the wires upward and push them carefully back through the hanger bracket into the outlet box. Make sure that the wires are still attached to the wire nuts.

Installing the Canopy

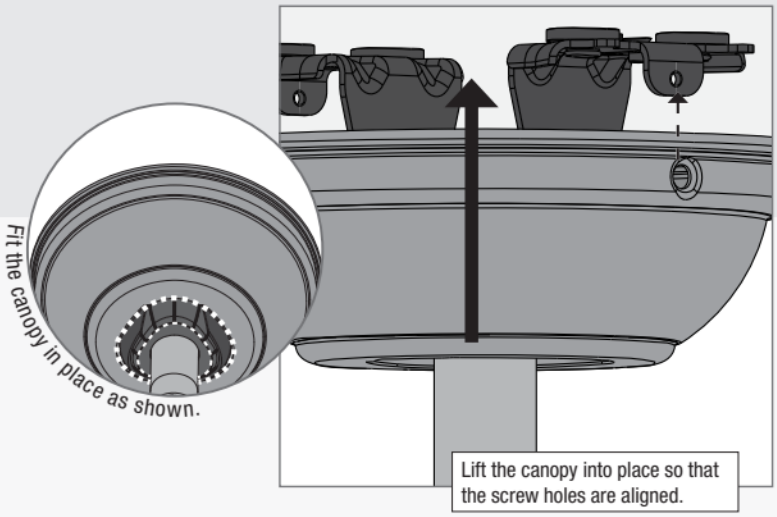

Insert the two canopy screws found in the ● hardware bag.



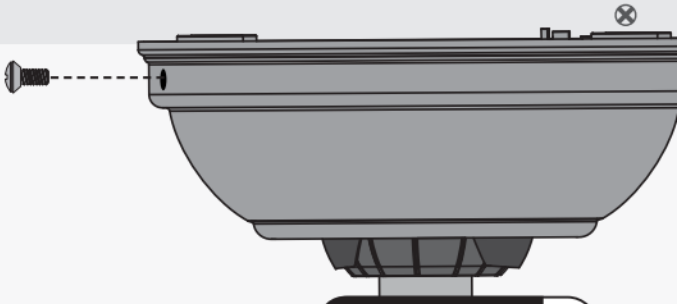

NOTICE

If screw holes do not align properly then rotate the canopy 180 degrees. Hanger ball shape must match canopy opening for correct canopy installation.

Attach each blade to a blade iron using the blade washers, found in the hardware bag ■, and the blade assembly screws, found in the hardware bag ▲.

Note:

Fan style may vary.

Installing the Blades:

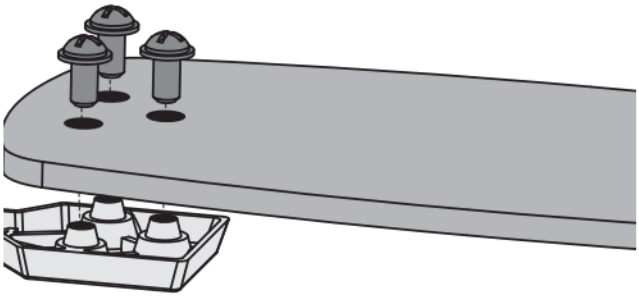

Attach each blade to a blade iron using the blade washers and the blade assembly screws, found in the hardware bag ▲.

Repeat x4

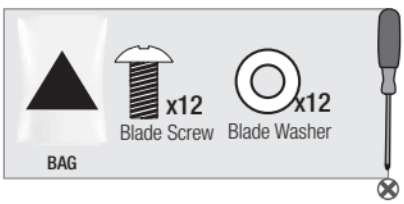

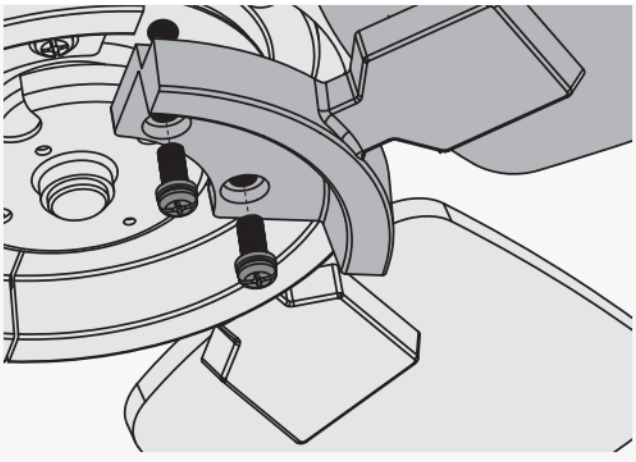

Lightly attach the blade arms to the motor with screws found in the ⧖ hardware bag, then securely tighten after both screws are attached.

Repeat x4

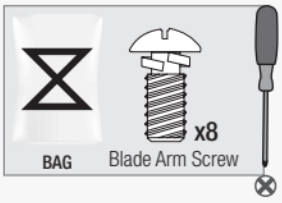

Assembling the LIght Kit

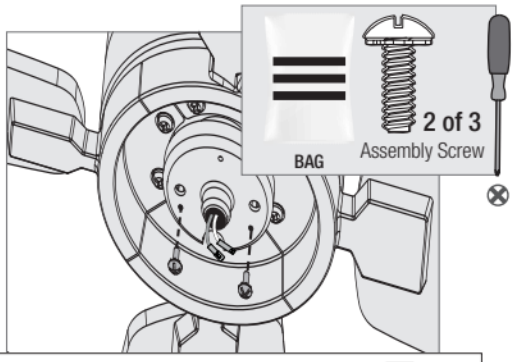

Partially install two assembly screws, found in the ≡ hardware bag, halfway into the motor housing as shown. It does not matter which two screw holes you choose.

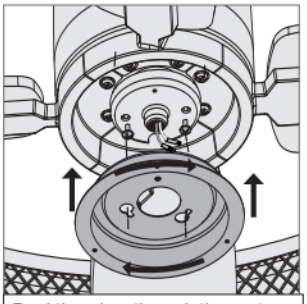

Feed the wires through the center hole of the upper switch housing, then wrap keyhole slots around the screws and twist clockwise.

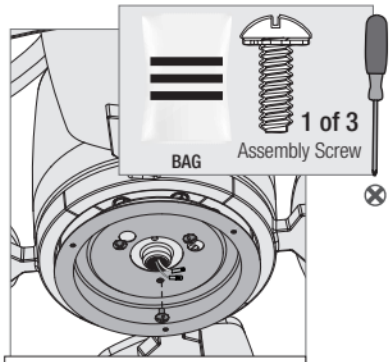

Insert the third screw, found in the ≡ hardware bag, into place and then tighten all three screws.

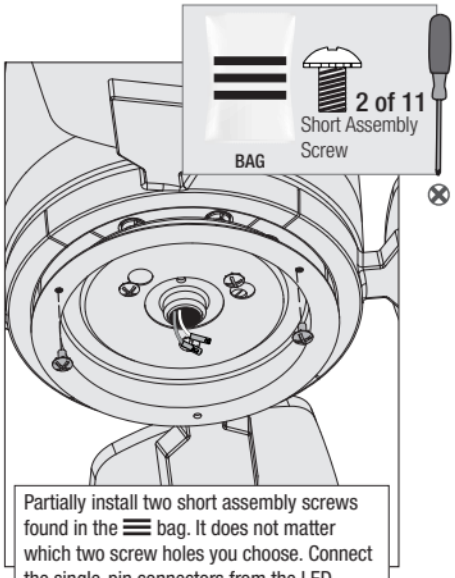

Partially install two short assembly screws found in the ≡ bag. It does not matter which two screw holes you choose. Connect the single-pin connectors from the LED assembly to the connectors from the fan. Connect the white wires together. Connect the blue and black wires together.

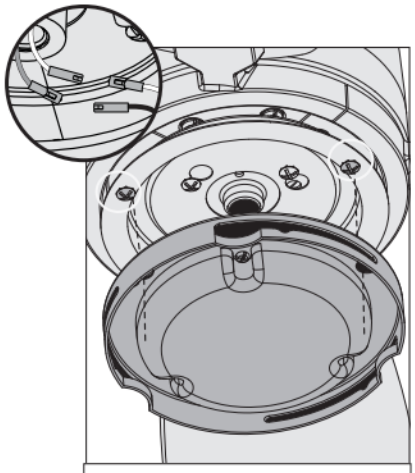

Align the keyhole slots in the LED assembly with the two screws. Make sure all the wires from the fan and the light kit are snug inside the center of the light kit, not pinched in between the upper switch housing and the light kit or hanging out of the sides.

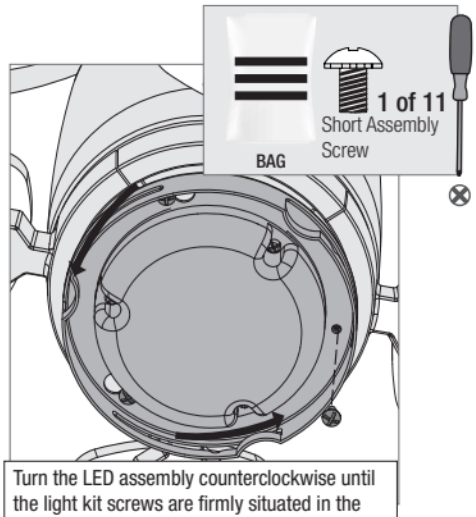

Turn the LED assembly counterclockwise until the light kit screws are firmly situated in the narrow end of the keyhole slots. Install the third screw and tighten all three screws securely.

⚠ WARNING

FAN FALL HAZARD
Make sure all screws are tight to secure the light fixture.

Installing the Glass

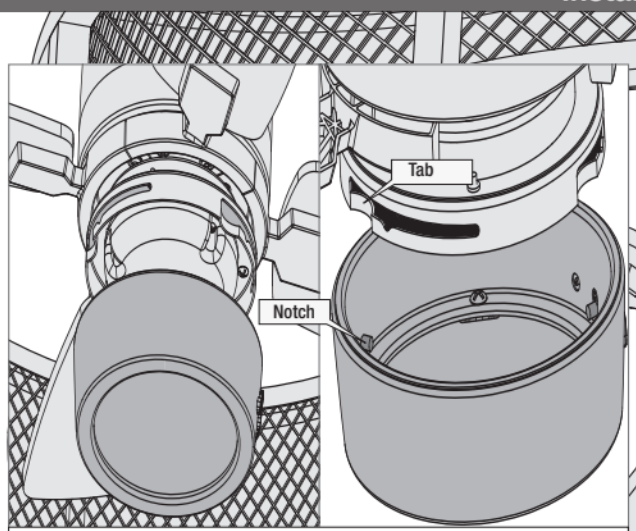

Lift the cap and align the notches in the cap with the tabs in the light kit.

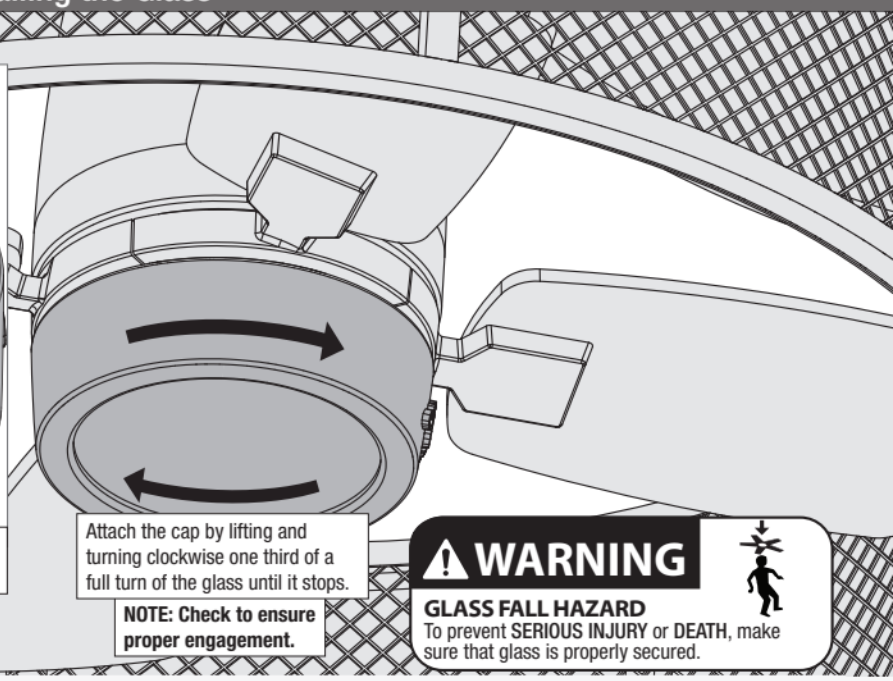

Attach the cap by lifting and turning clockwise one third of a full turn of the glass until it stops.

NOTE: Check to ensure proper engagement.

⚠ WARNING

GLASS FALL HAZARD
To prevent **SERIOUS INJURY** or **DEATH**, make sure that glass is properly secured.

Preparing the Remote

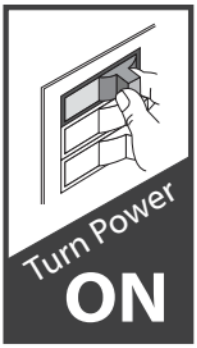

Once the power is turned on, ***the remote must be paired within 60 seconds****. Pairing is only required once after initial installation.*

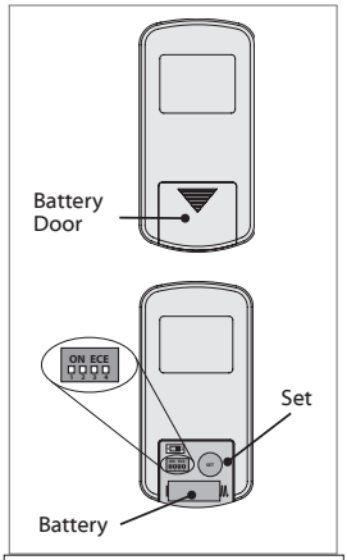

Remove battery door. Change the dip switch settings if they match a previously installed remote transmitter. Install A23 or MN21 alkaline battery in the proper polarity and replace the battery door. To pair the remote, hold down the Set button for 5 seconds. Pairing is complete when LED button flashes twice.

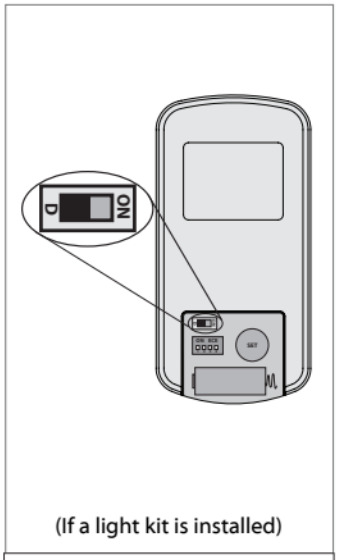

(If a light kit is installed)

If a light kit is installed on your fan, choose the light bulb mode by moving the toggle switch. Move the switch towards the "D" for CFL bulbs and toward "ON" for standard bulbs. Replace the battery door.

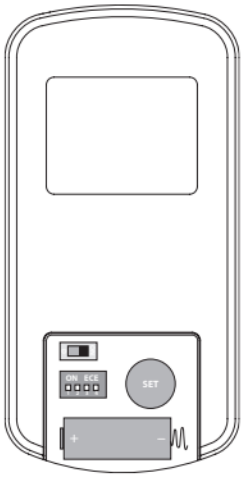

To change the battery, remove the battery door. Remove battery and replace with A23 or MN21 alkaline battery. Please observe proper polarity placement.

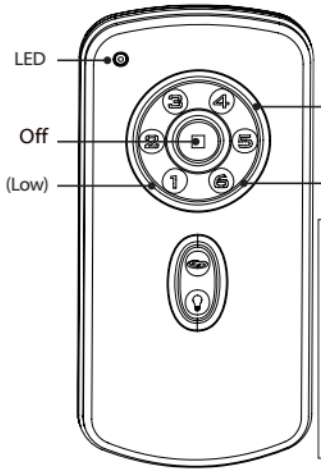

To select fan speed press one of the numbers on the Fan Speed Dial. To calibrate the fan speed, run the fan on "6" for 90 seconds after each AC power reset. The LED light flashes to indicate a signal has been sent to the fan.

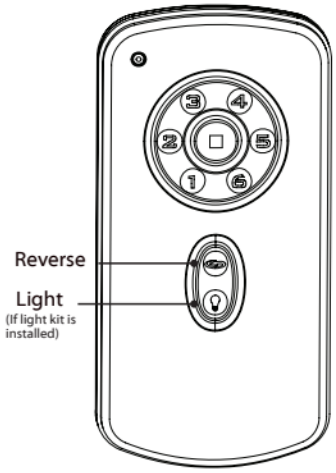

To reverse the air flow direction, press the Reverse button while fan is running. Press Light button to turn lights off/on. To dim the lights, press the light button for more than one second. Light will cycle from brightest to dimmest. Release the light button when desired brightness is achieved.

Installing the Remote Control Cradle

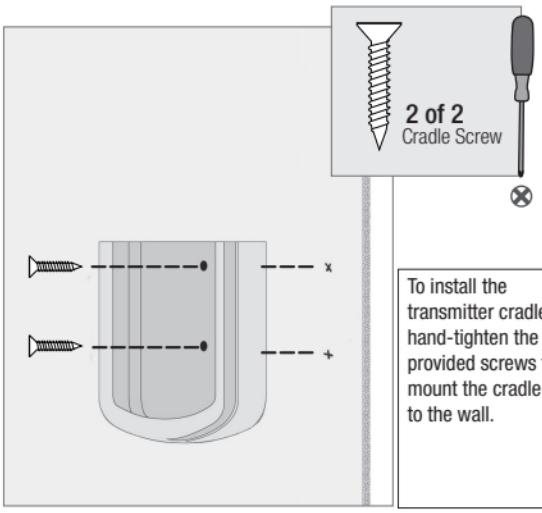

To install the transmitter cradle, hand-tighten the provided screws to mount the cradle to the wall.

Troubleshooting

Fan Doesn't Work

- Make sure power switch is on.
- Push the motor reversing switch firmly left or right to ensure that it is engaged.
- Check the circuit breaker to ensure the power is turned on.
- Make sure the blades spin freely.
- Turn off power from the circuit breaker, then loosen the canopy and check all the connections according to the wiring diagram.
- Check the plug connection in the switch housing.

Excessive Wobbling

- Make sure the blades are properly installed on the blade iron posts.
- Turn the power off, support the fan carefully, and check that the hanger ball is properly seated.
- Use the provided balancing kit and instructions to balance the fan.

Remote Control of Fan is Erratic

- Make sure the battery is installed correctly.
- Install a fresh battery.

Remote Only Works Close to Fan

- Change battery.

Noisy Operation

- Make sure the blades are properly installed.
- Check to see if any of the blades are cracked. If so, replace all of the blades.

Multiple Remote Issues

- If you have multiple remotes or multiple remote-controlled fans installed on the same circuit breaker and you are experiencing interference or faulty operation of your remote controls, please go to www.HunterFan.com/FAQs and click "How do I properly install multiple remote-controlled fans?" for information on how to correct this issue.

Hunter Pro Tip:

Cleaning the Fan
Use soft brushes or cloths to prevent scratching. Cleaning products may damage the finishes.

Limited Lifetime Warranty

Hunter Fan Company grants this limited warranty to the original purchaser of this Hunter ceiling fan. This document can be found at www.HunterFan.com.
Thank you for choosing Hunter!

How Can Warranty Service Be Obtained?

Proof of purchase is required when requesting warranty service. The original purchaser must present a sales receipt or other document that establishes proof of purchase. Hunter, at its sole discretion, may accept a gift receipt. To obtain service, contact Hunter Fan Company online or by phone.

www.HunterFan.com/Support/Contact-Us/
1-888-830-1326

Please do not ship your fan or any fan parts to Hunter. Delivery will be refused.

What Does This Warranty Cover?

Motor — Limited Lifetime Warranty
If any part of your ceiling fan motor fails during your ownership of the fan due to a defect in material or workmanship, as determined solely by Hunter, Hunter will provide you with a replacement fan free of charge.* The foregoing limited warranty applies only to the motor itself and does not apply to electronic controls – such as remote control transmitters, remote control receivers, or capacitors – used in conjunction with the motor. Such electronic control items are included in the one-year limited warranty below.

Other — One-Year Limited Warranty
Except as otherwise indicated throughout this warranty, if any part of your Hunter ceiling fan fails at any time within one year of the date of purchase due to a defect in material or workmanship, as determined solely by Hunter, Hunter will provide a replacement part free of charge.*

Light Kits — Warranty May Vary
Light kits are included in the one-year limited warranty. However, you may qualify for additional warranty coverage if your fan includes one of the following:

- **LED Light Kits — Three-Year Limited Warranty**
  If your LED light kit module (not including glass components) or LED bulb fails at any time within three years of the date of purchase due to a defect in material or workmanship, as determined solely by Hunter, Hunter will provide a replacement part free of charge.*

** If no replacement product/part can be provided for your fan, we will provide a comparable or superior replacement product/part at the sole discretion of Hunter.*

What Does This Warranty NOT Cover?

Labor Excluded. This warranty does not cover any costs or fees associated with the labor (including electrician's fees) required to install, remove, or replace a fan or any fan parts. There is no warranty for light bulbs (except where otherwise noted); remote control batteries; fans purchased or installed outside the United States; fans owned by someone other than the original purchaser; fans for which proof of purchase has not been established; fans purchased from an unauthorized dealer; ordinary wear and tear; minor cosmetic blemishes; refurbished fans; and fans that are damaged due to any of the following: improper installation, misuse, abuse, improper care, failure to follow Hunter instructions, accidental damage caused by the fan owner or related parties, modifications to the fan, improper or incorrectly performed maintenance or repair, improper voltage supply or power surge, use of improper parts or accessories, failure to provide maintenance to the fan, or acts of God (e.g. flood).
ORIGINAL PURCHASER'S SOLE AND EXCLUSIVE REMEDY FOR A CLAIM OF ANY KIND WITH RESPECT TO THIS PRODUCT SHALL BE THE REMEDIES SET FORTH HEREIN. HUNTER FAN COMPANY IS NOT RESPONSIBLE FOR CONSEQUENTIAL OR INCIDENTAL DAMAGES, DUE TO PRODUCT FAILURE, WHETHER ARISING OUT OF BREACH OF WARRANTY, BREACH OF CONTRACT, OR OTHERWISE. Some States do not allow the exclusion or limitation of incidental or consequential damages, so the above limitation or exclusion may not apply to you.
ANY IMPLIED WARRANTIES OF MERCHANTABILITY OR FITNESS FOR A PARTICULAR PURPOSE APPLICABLE TO THIS PRODUCT ARE LIMITED IN DURATION TO THE PERIOD OF COVERAGE OF THE APPLICABLE LIMITED WARRANTIES SET FORTH ABOVE. Some States do not allow limitations on how long an implied warranty lasts, so the above limitation may not apply to you.

How Does State Law Affect Warranty Coverage?

This warranty gives you specific legal rights. You may also have other rights which vary from state to state.

If you need a different downrod length follow these steps:

Follow steps 1-5 to remove standard downrod pipe

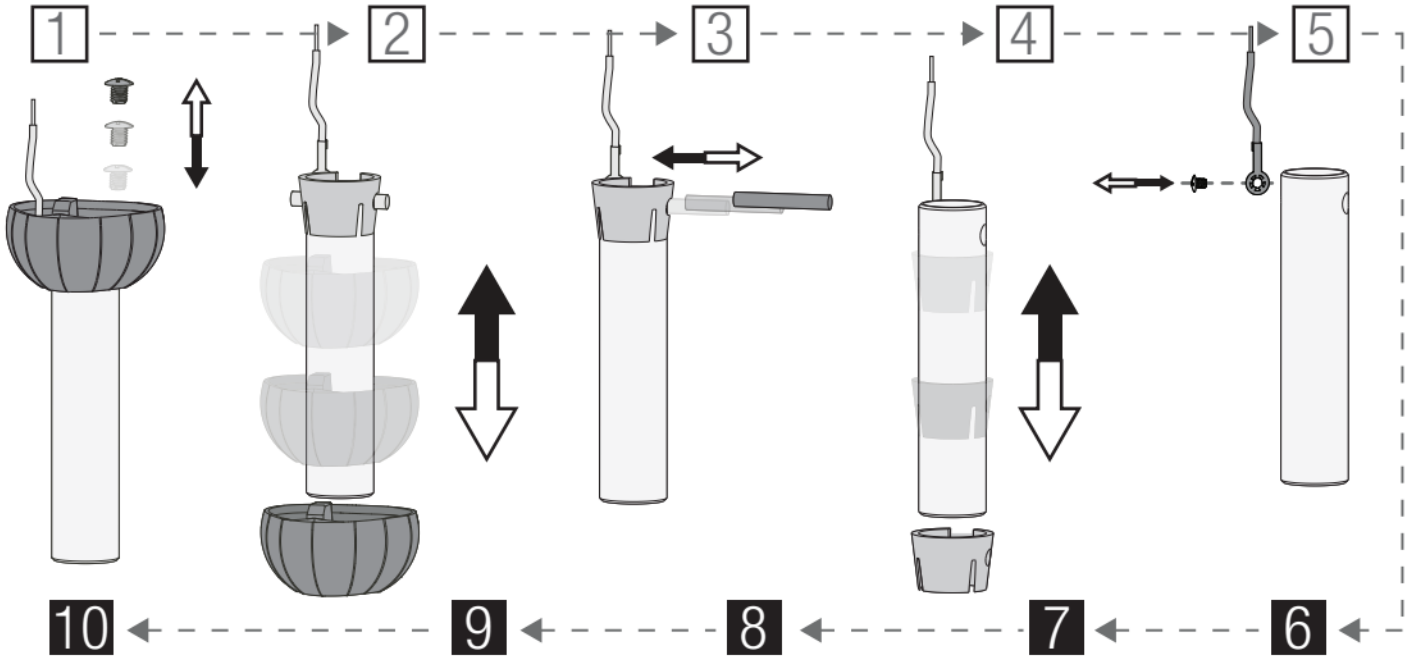

Follow steps 6-10 to reassemble with new downrod

⚠ WARNING

FAN FALL HAZARD

To prevent **SERIOUS INJURY** or **DEATH:**

- **ALWAYS** follow the downrod assembly instructions exactly.
- **VERIFY** the downrod is assembled correctly by firmly pulling on the hanger ball.