ITM. / ART. 1718602



54 in Exeter

Installation Manual

IMPORTANT, RETAIN FOR FUTURE REFERENCE: READ CAREFULLY.
FOR DOMESTIC USE ONLY, NOT FOR COMMERCIAL USE.

Model: 52858 Matte Black
Fan weight ±0.9 kg / 2 lbs: 7.5 kg / 16.53 lbs

Hunter

©2024 Hunter Fan Co.
PG4169 r022124

Congratulations on purchasing your new Hunter® ceiling fan!

The ceiling fan you purchased will provide comfort and performance in your home or office for many years. This instruction manual contains complete instructions for installing and operating your fan. We are proud of our work and appreciate the opportunity to supply you with the best ceiling fan available anywhere in the world.

We are here to help!

This Instruction Manual is designed to make installation as simple as possible. While working through this Instruction Manual, keep your smartphone or tablet nearby. We have added video links to help you through the more technical sections. If you are unfamiliar or uncomfortable with wiring, contact a qualified electrician. We also provide telephone support at 1.888.830.1326 (Monday - Friday 8am - 6pm CST. Saturday 11am - 4pm CST [English or Español])or visit us at HunterFan.com.

RETAIN FOR FUTURE REFERENCE:
READ CAREFULLY.

⚠ WARNING



Warning

w.1 - To reduce the risk of fire, electrical shock, or personal injury, mount fan directly from building structure and/or an outlet box marked acceptable for fan support of 31.8 kg / 70 lbs and use the mounting screws provided with the outlet box.

w.2 - To avoid possible electrical shock, before installing or servicing your fan, disconnect the power by turning off the circuit breakers to the outlet box and associated wall switch location. If you cannot lock the circuit breakers in the off position, securely fasten a prominent warning device, such as a tag, to the service panel.

w.3 – To reduce the risk of electric shock, this fan must be installed with an isolating wall control/switch.

w.4 - To reduce the risk of personal injury, do not bend the blade brackets when installing the blade brackets, balancing the blades, or cleaning the fan. Do not insert foreign objects in between rotating fan blades.

w.5 - Non-rechargeable batteries are not to be recharged. Exhausted batteries are to be removed from the product.

w.6 - This appliance can be used by children aged from 8 years and above and persons with reduced physical, sensory or mental capabilities or lack of experience and knowledge if they have been given supervision or instruction concerning use of the appliance in a safe way and understand the hazards involved. Children shall not play with the appliance. Cleaning and user maintenance shall not be made by children without supervision. It is recommended that children be supervised to ensure that they are not using the appliance improperly.

w.7 - To reduce the risk of fire or electric shock or injury to persons, do not use replacement parts that have not been recommended by the manufacturer (e.g. parts made at home using a 3D printer).

Caution

c.1 - All wiring must be in accordance with national and local electrical codes ANSI/NFPA 70. If you are unfamiliar with wiring, use a qualified electrician.

c.2 - Use only Hunter replacement parts.

This equipment has been tested and found to comply with the limits for a Class B digital device, pursuant to part 15 of the FCC Rules. These limits are designed to provide reasonable protection against harmful interference in a residential installation. This equipment generates, uses and can radiate radio frequency energy and if not installed and used in accordance with the instructions may cause harmful interference to radio communications.

However, there is no guarantee that interference will not occur in a particular installation. If this equipment does cause harmful interference to radio or television reception, which can be determined by turning the equipment off and on, the user is encouraged to try to correct the interference by one or more of the following measures:

- Reorient or relocate the receiving antenna.
- Increase the separation between the equipment and receiver.
- Connect the equipment into an outlet on a circuit different from that to which the receiver is connected.
- Consult the dealer or an experienced radio/TV technician for help.

Caution: modifications not approved by the party responsible for compliance could void user's authority to operate the equipment.

This device complies with Part 15 of the FCC Rules. Operation is subject to the following two conditions: (1) This device may not cause harmful interference, and (2) this device must accept any interference received, including interference that may cause undesired operation.

This product conforms to UL Standard 507.

Intertek

Here are the tools you'll need to complete your installation: (not included)



Ladder



Screwdriver



Pliers



Wire Strippers

OPTIONAL

If mounting to a support structure, you will also need these tools.



Drill



9/64 inch Drill Bit

Distributed by:
Costco Wholesale Corporation
999 Lake Drive
Issaquah, WA 98027
USA
www.costco.com

© 2024 Hunter Fan Company
7130 Goodlett Farms Pkwy, Suite 400
Memphis TN 38016
Made in China

¡Felicitaciones por la compra de su nuevo Ventilador de techo Hunter®!

El ventilador de techo que compró le proveerá de comodidad y rendimiento en su casa u oficina por muchos años. Este manual de instrucciones contiene instrucciones completas para instalar y operar su ventilador. Estamos orgullosos de nuestro trabajo y apreciamos la oportunidad de proveerle con el mejor ventilador de techo disponible en cualquier lugar del mundo.

¡Estamos aquí para ayudarlo!

Este Manual de instrucciones está diseñado para hacer la instalación tan sencilla como sea posible. Mientras trabaja a través de este Manual de instrucciones, mantenga su teléfono inteligente o su tableta cerca. Hemos añadido enlaces de video para ayudarlo a través de las secciones más técnicas. Si usted no está familiarizado o se siente incómodo con el cableado, contacte a un electricista calificado. También proveemos un número telefónico de soporte el 1. 888. 830. 1326 (De lunes a viernes de 8 AM a 6 PM CST. Sábados de 11 AM a 4 PM CST [inglés o español]) o visítenos en Hunterfan.com.

IMPORTANTE, CONSERVAR PARA FUTURAS CONSULTAS: LEA DETENIDAMENTE.

⚠ADVERTENCIA

Advertencias

w.1 – Para reducir el riesgo de incendio, choque eléctrico o lesiones personales, monte el ventilador directamente a la estructura de la edificación y/o una caja de salida marcada como aceptable para soporte de ventiladores de 31.8 kg / 70 lb y utilice los tornillos de montaje suministrados con la caja de salida.

w.2 - Para evitar posibles choques eléctricos, antes de instalar o dar servicio de mantenimiento a su ventilador, desconecte la alimentación apagando los interruptores automáticos que alimentan a la caja de salida y el interruptor de pared asociado. Si no puede bloquear los interruptores automáticos en la posición de apagado, asegure firmemente una forma destacada de advertencia, como una etiqueta de seguridad, en el tablero de servicio.

w.3 – Para reducir el riesgo de descarga eléctrica, este ventilador debe instalarse con un interruptor / control de pared aislante.

w.4 - Para reducir el riesgo de lesiones personales, no doble los soportes de paleta cuando los instale, cuando equilibre las paletas, o al limpiar el ventilador. No introduzca objetos extraños entre las paletas del ventilador en movimiento.

w.5 - Las baterías no-recargables no se deben recargar. Las baterías gastadas se deben sacar del producto.

w.6 - Este aparato puede ser utilizado por niños de 8 años en adelante y por personas con capacidades físicas, sensoriales o mentales reducidas, o sin experiencia ni conocimiento, si se les ha proporcionado supervisión o instrucciones respecto del uso seguro del aparato y si entiende los peligros que implica. Los niños no deben jugar con el aparato. El mantenimiento de limpieza y de uso no debe ser realizado sin supervisión. Se recomienda que los niños estén supervisados para asegurar que no estén utilizando el aparato inapropiadamente.

w.7 - Para reducir el riesgo de incendio, choque eléctrico o lesiones personales, no use piezas de repuesto que no hayan sido recomendadas por el fabricante (por ejemplo, piezas hechas en casa utilizando una impresora 3D).

Precauciones

c.1 - Todo el cableado debe realizarse de acuerdo con los códigos eléctricos locales y nacionales con ANSI/NFPA 70. Si no está familiarizado con el cableado, emplee un electricista calificado.

c.2 - SOLAMENTE use piezas de repuesto Hunter.

Este equipo se ha probado y cumple con los límites para un dispositivo digital clase B, de acuerdo con la Parte 15 de las reglas FCC. Estos límites tienen la intención de proporcionar una protección razonable contra la interferencia perjudicial en una instalación residencial. Este equipo genera, usa y puede radiar energía de radio frecuencia, y si no se instala y usa de acuerdo con las instrucciones, puede causar interferencia perjudicial a la comunicación por radio.

Sin embargo, no hay garantía de que no pueda producirse interferencia en una instalación en particular. Si este equipo causa alguna interferencia perjudicial a la recepción de radio o televisión, lo que puede determinarse apagando y encendiendo el equipo; el usuario debe tratar de corregir la interferencia aplicando una o más de las medidas siguientes:

- Reoriente o reubique la antena receptora.
- Aumente la separación entre el equipo y el receptor.
- Conecte el equipo en una salida de un circuito diferente del circuito en que está conectado el receptor.
- Consulte con su representante de ventas o con un técnico experimentado de radio/TV.

Precaución: las modificaciones que no estén aprobadas por escrito por la parte responsable del cumplimiento pueden anular la autoridad del usuario para operar el equipo.

Este dispositivo cumple con la parte 15 de las reglas FCC. La operación está sujeta a las dos siguientes condiciones: (1) este dispositivo no puede causar una interferencia perjudicial, y (2) este dispositivo debe tolerar cualquier interferencia recibida, incluyendo interferencias que puedan causar una operación no deseada.

ETL us Intertek **Este producto se ajusta al Estándar 507 UL.**

Estas son las herramientas que usted necesitará para completar su instalación:



Escalera



Destornilladore



Alicates



Pelacables

OPCIONAL

Si se monta a una estructura de soporte, también necesitará estas herramientas.



Taladro eléctrico



Broca de 9/64 pulgada

Distributed by:
Costco Wholesale Corporation
999 Lake Drive
Issaquah, WA 98027
USA
www.costco.com

© 2024 Hunter Fan Company
7130 Goodlett Farms Pkwy, Suite 400
Memphis TN 38016
Hecho en China

Here is what comes in your box:

We recommend that you pull everything out of the box and lay it out. We have grouped the drawn components below with the hardware you'll need for those parts. The screws below are drawn to scale to make it easier to identify what piece of hardware is needed to install each component.

Hunter Pro Tip:

Do not discard the hardware bags or mix parts from different bags. Make note of the symbol printed on each hardware bag. The symbols can be used to identify the appropriate hardware for each step.

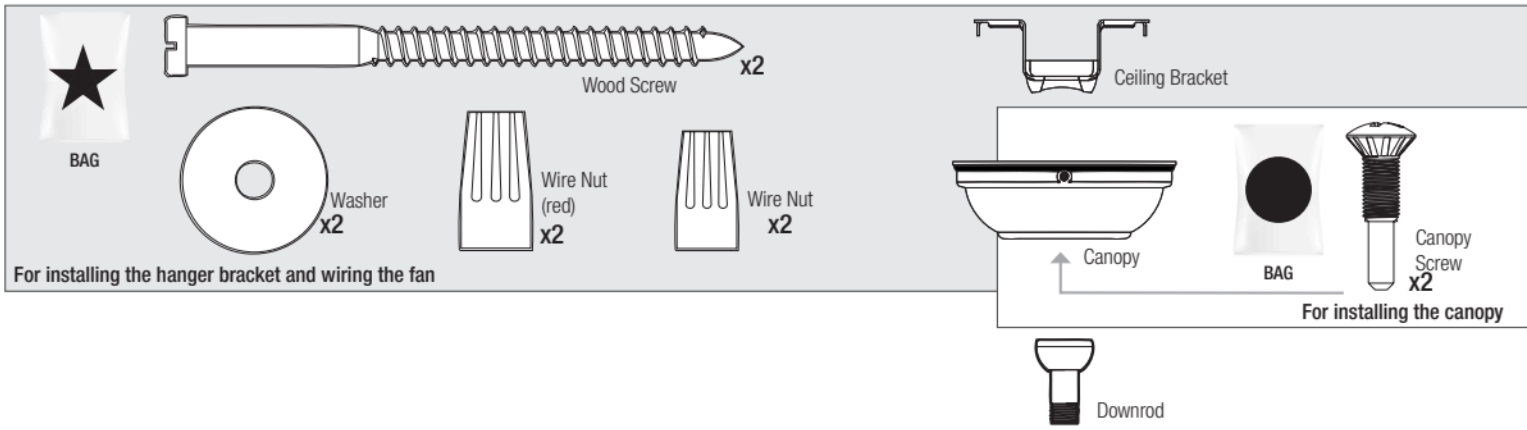

For installing the hanger bracket and wiring the fan

For installing the canopy

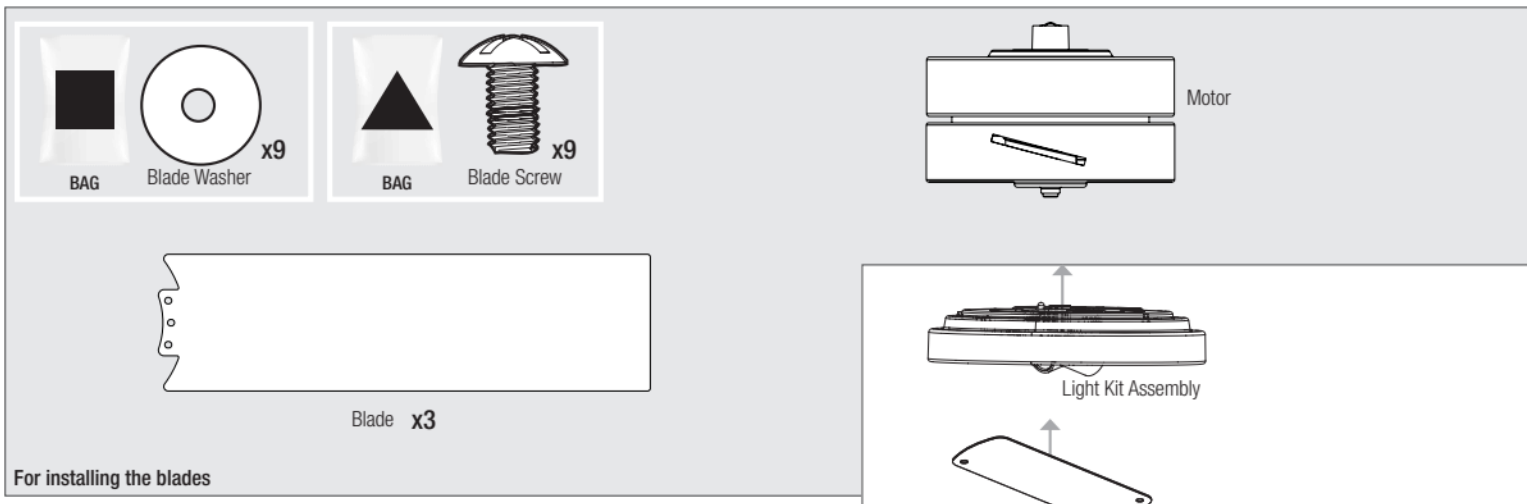

For installing the blades

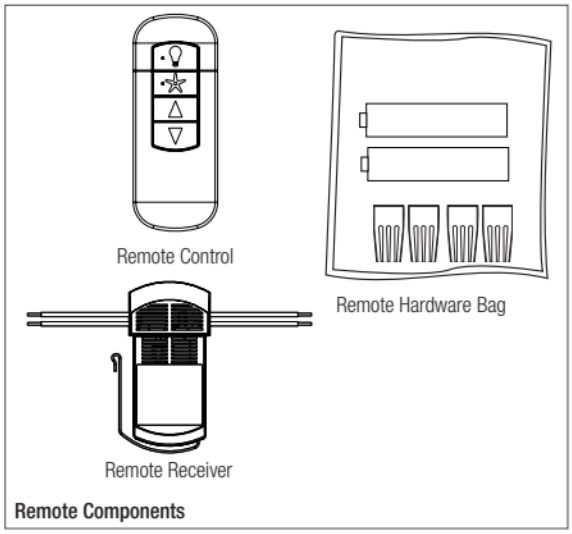

Remote Components



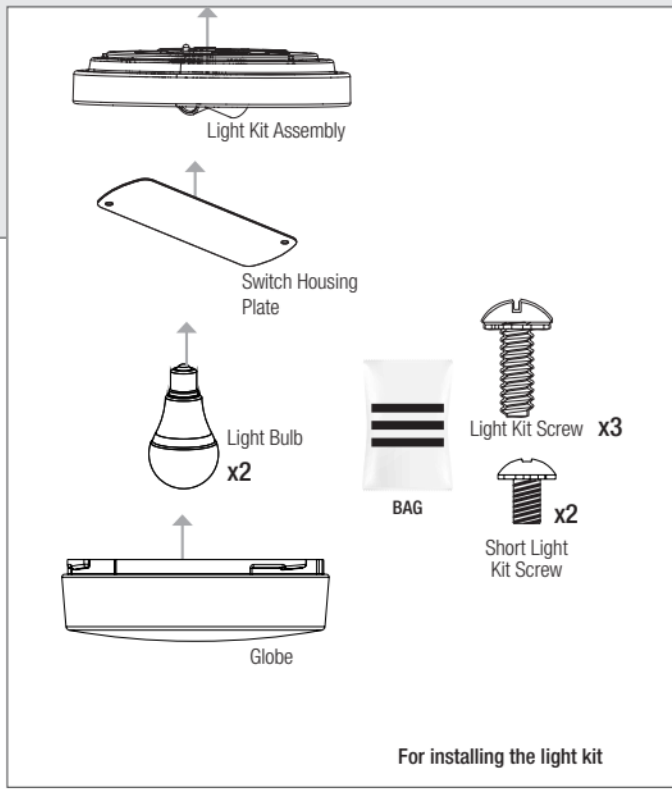

For installing the light kit

Assembly required. For indoor and covered outdoor use only.

Find a part that is missing or damaged?
Don't take it back to the store. Let us make it right. Visit us at HunterFan.com or call us at 1.888.830.1326.
Monday - Friday 8am - 6pm CST. Saturday 11am - 4pm CST (English or Español)

Choosing the Right Installation Location

You probably bought this fan with a location in mind. Let's check below to make sure it is a good fit.

Check the room dimensions:

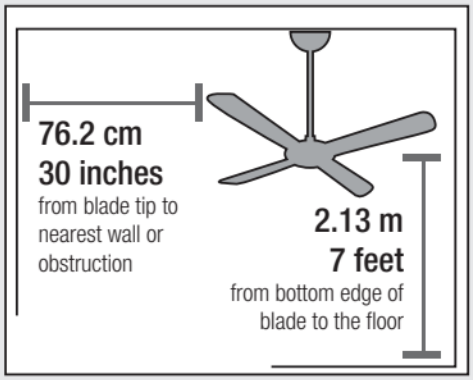

Check the outlet box:

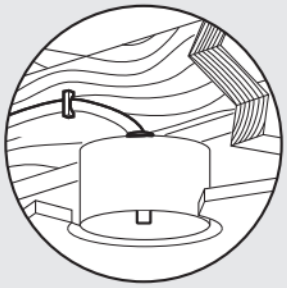

You must be able to secure the fan to building structure or fan-rated outlet box.

Checking the Ceiling Angle:

Standard Mounting

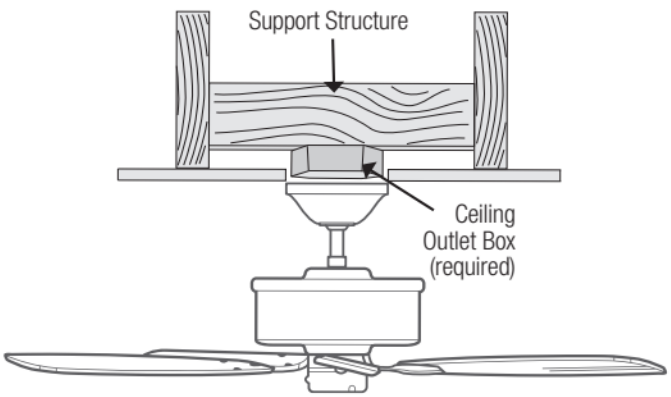

If you have a flat ceiling:

Hang your fan by a standard downrod. Some fans come with a shorter downrod for a Low Profile installation.

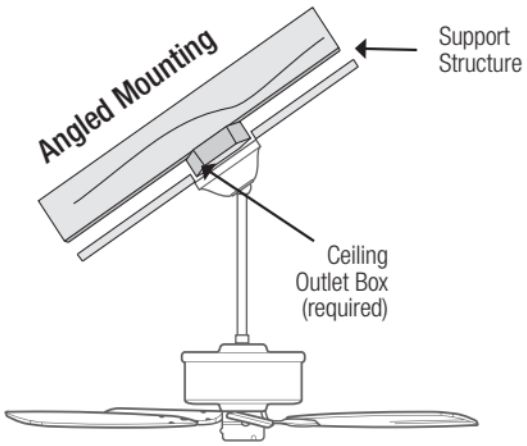

If you have an angled or vaulted ceiling:

1. You will need a longer downrod. (sold separately at HunterFan.com)
2. If your ceiling angle is greater than 34°, you will also need an Angled Mounting Kit. (Sold separately at HunterFan.com)

Angled Mounting

A little more information on Angled Mounting:

For optimum performance and appearance, a longer downrod should be used with your Hunter ceiling fan when installing on high or angled ceiling. If your ceiling is angled greater than 34° you will also need an Angled Mounting Kit. Longer downrods and the Angled Mounting Kit are sold separately at HunterFan.com.

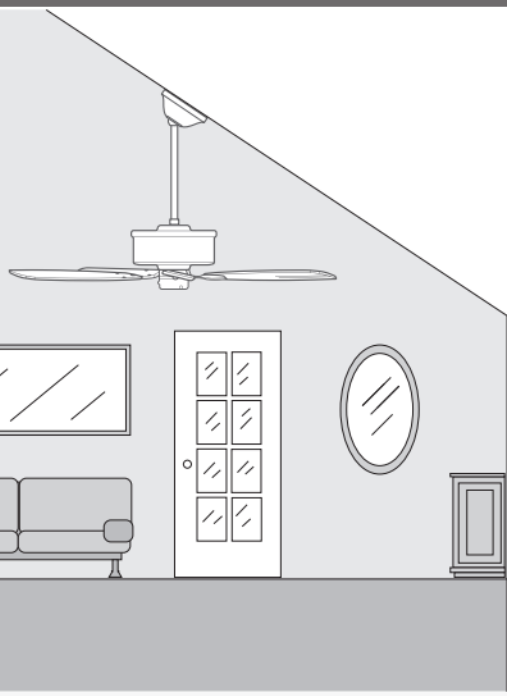

Hunter Pro Tip:

Determining if you need an Angled Mounting Kit:

Fold on the dotted line. Place against edge againts the wall. Slide towards the ceiling.

If the guide touches the wall but not the ceiling, you need an angled mounting kit.



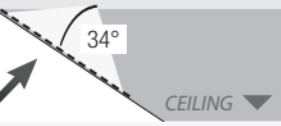

Installing the Ceiling Bracket

You have **two options** for installation. Pick which one works best for your location. Remove any existing bracket prior to installation. **Only use the provided Hunter ceiling bracket that came in your fan's box.**

Hunter Pro Tip:

The machine screws are the ones that came with your outlet box.

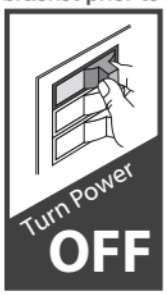

Do this first!

⚠ WARNING

To avoid possible electrical shock, before installing your fan, disconnect the power by turning off the circuit breakers to the outlet box associated with the wall switch location.

Option 1:
Machine Screws

Use machine screws *(provided with outlet box)* and washers when securing to existing ceiling fan-rated outlet box. Make sure it is securely installed and is acceptable for fan support of 31.8 kg / 70 lb or less.

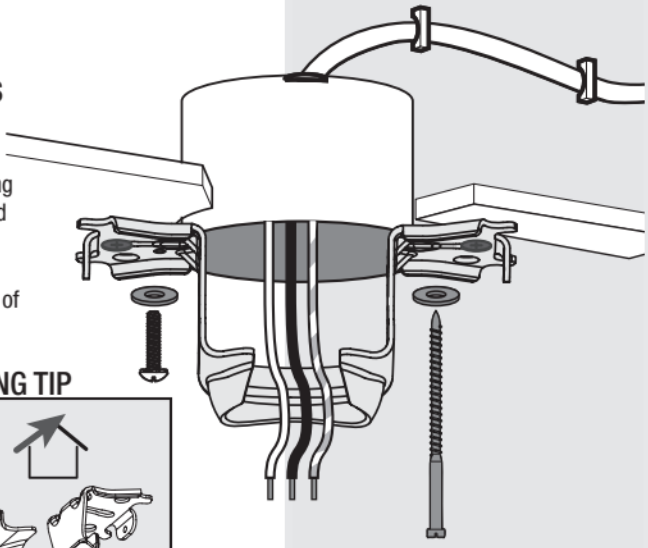

Option 2:
Wood Screws

Use wood screws and washers (included) when securing to support structure with approved electrical outlet box.
Drill 3.6 mm / 9/64 in pilot holes in support structure to aid in securing ceiling bracket with hardware found in the ★ hardware bag.

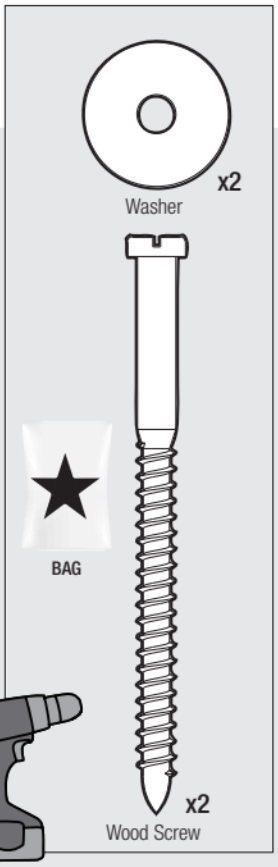

ANGLED MOUNTING TIP

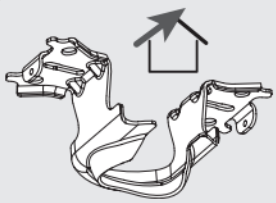

For angled ceilings, point opening toward peak.

Installing the Downrod

Follow below if you are using the downrod that came pre-assembled in your box. Need to install a longer or shorter downrod? Check out the guide at the end of this manual.

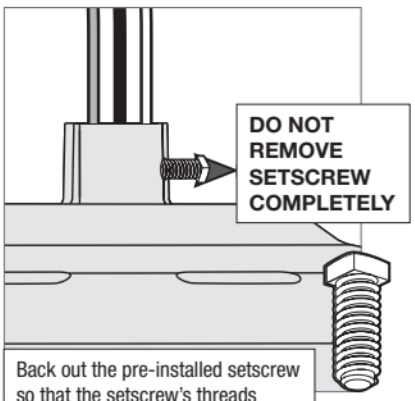

Back out the pre-installed setscrew so that the setscrew's threads are still engaged while the shank does not protrude and obstruct the insertion of the downrod.

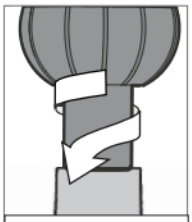

Pass all wires to one side of horizontal bar in downrod assembly. Hand tighten the downrod until it stops (at least 4–5 complete revolutions).



Tighten the setscrew with pliers. **DO NOT HAND TIGHTEN.**

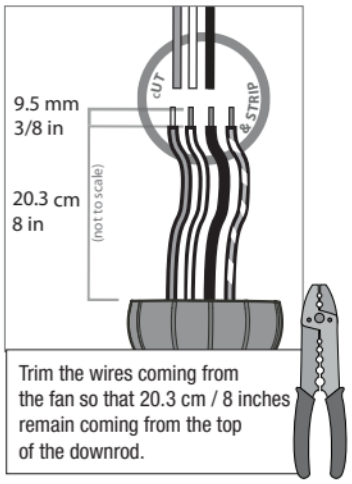

Trim the wires coming from the fan so that 20.3 cm / 8 inches remain coming from the top of the downrod.

⚠ WARNING

FAN FALL HAZARD

To prevent **SERIOUS INJURY** or **DEATH:**

- **ALWAYS** tighten setscrew with pliers.
- **DO NOT** hand tighten setscrew.
- **CHECK** the setscrew is tight using pliers each time you change fan direction.

Hunter Pro Tip:

The ground wire attached to the downrod is approximately 20.3 cm / 8 inches.



DR-01 r061622

Note:

Fan style may vary.

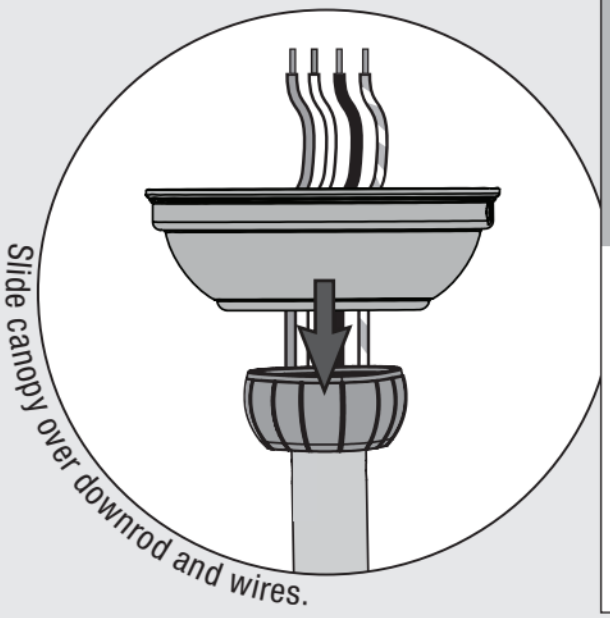

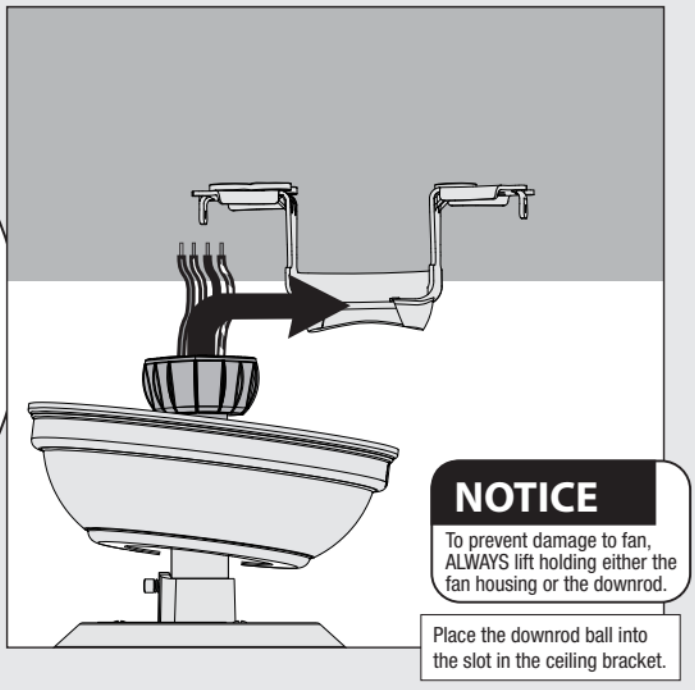

NOTICE

To prevent damage to fan, ALWAYS lift holding either the fan housing or the downrod.

Place the downrod ball into the slot in the ceiling bracket.

Progress Check:

Your fan should look like this.

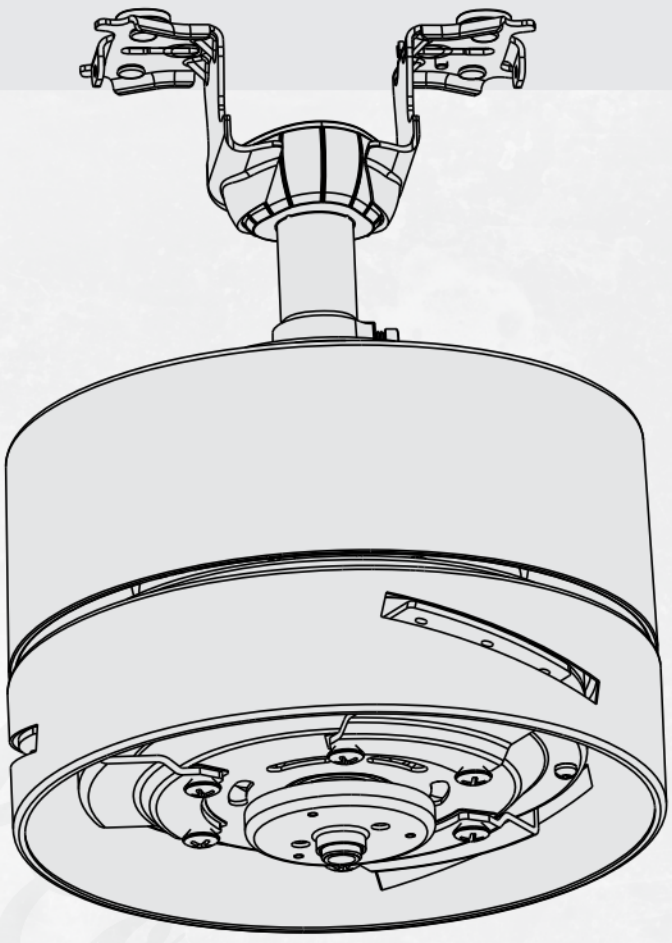

We know wiring is hard. Let's make it easier.

Follow these steps to get your fan wired quickly and safely. Follow the route below that best matches your wall switch setup. If you are unfamiliar with wiring or uncomfortable doing it yourself, please contact a qualified electrician.

Hunter Pro Tip:

Here is how to connect the wires:
Push the bare metal ends of the wires together and slide a wire nut over them. Then, twist the wire nut clockwise until tight. **Give it a gentle pull to make sure none of the wires are loose.**

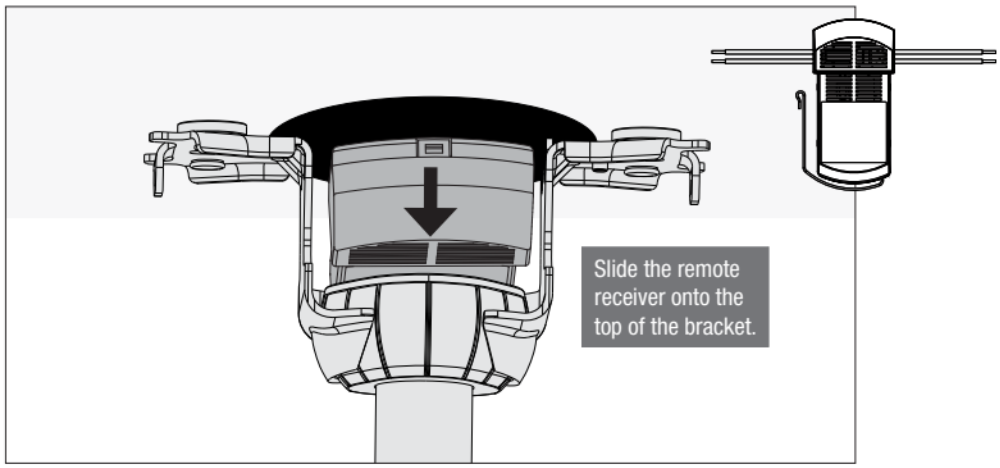

⚠ WARNING

The ceiling fan must be grounded. If the ground wire for the installation site is not present, immediately **STOP** installation and consult a qualified electrician. All wiring must be in accordance with national and local electrical codes ANSI/NFPA 70. If you are unfamiliar with wiring or in doubt, consult a qualified electrician.

NOTICE

For the connection of three wires, use the larger red wire nut supplied in the ★ hardware bag.

Hunter Pro Tip:

Have extra wiring?
Turn the wires upward and push them carefully back through the hanger bracket into the outlet box. Spread the wires apart, with the grounded wires on one side of the outlet box and the ungrounded wires on the other side of the outlet box. Make sure that the wires are still attached to the wire nuts.

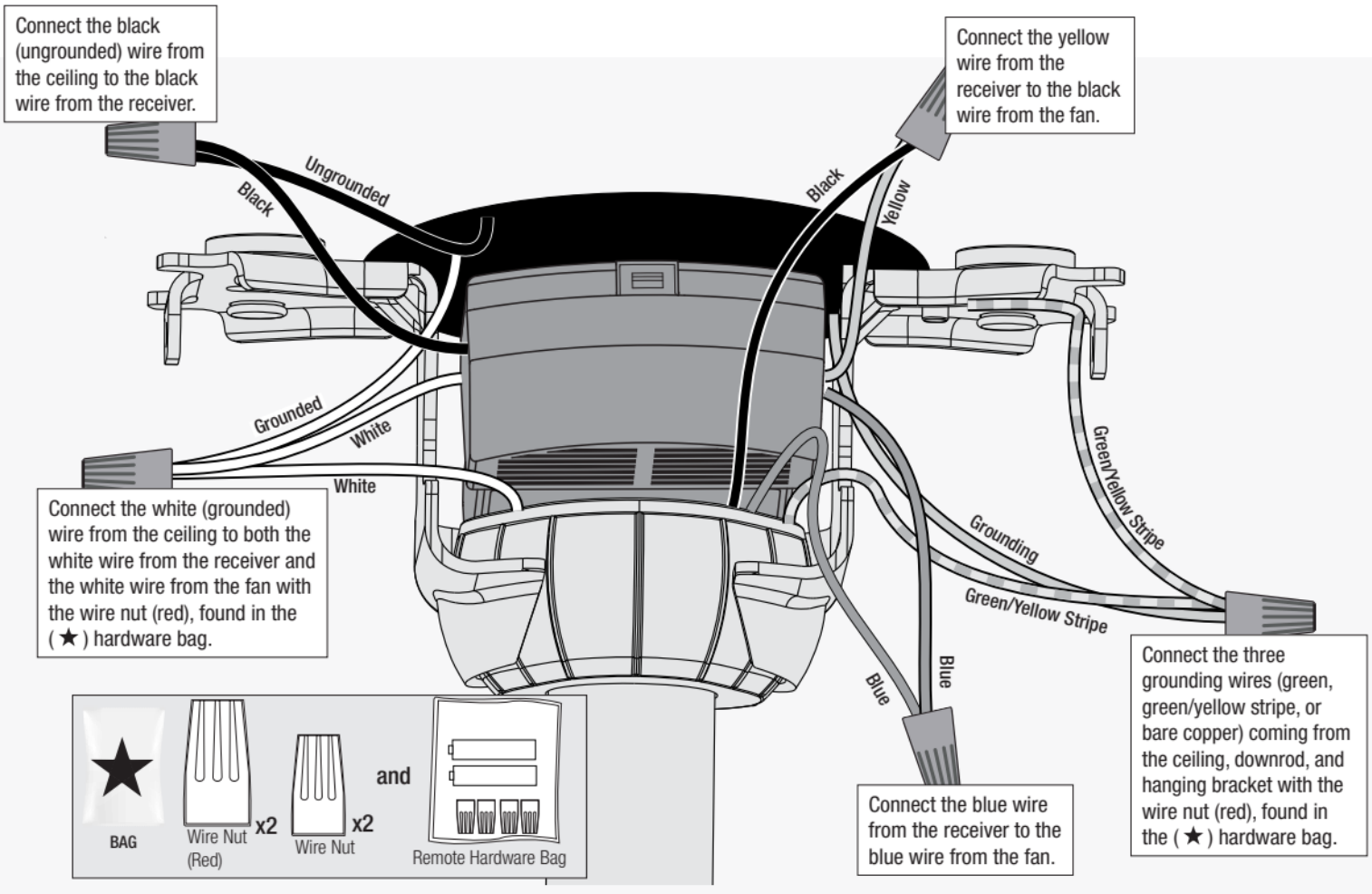

Installing the Canopy

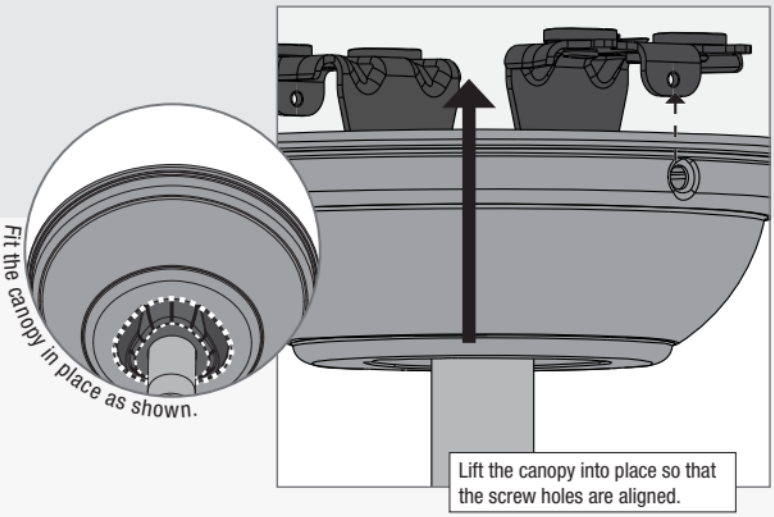

Insert the two canopy screws found in the ● hardware bag.



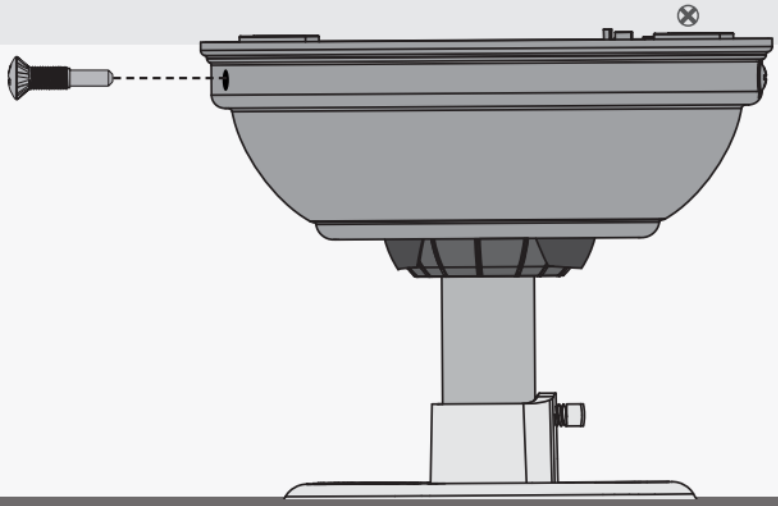

Installing the Blades:

Attach each blade to a blade iron using three blade washers, found in the ■ hardware bag, and three blade assembly screws, found in the ▲ hardware bag.

Repeat x3

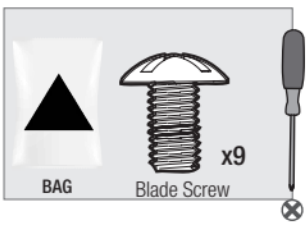

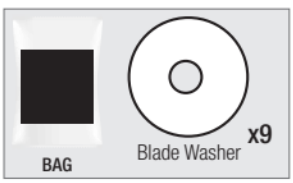

Assembling the LIght Kit

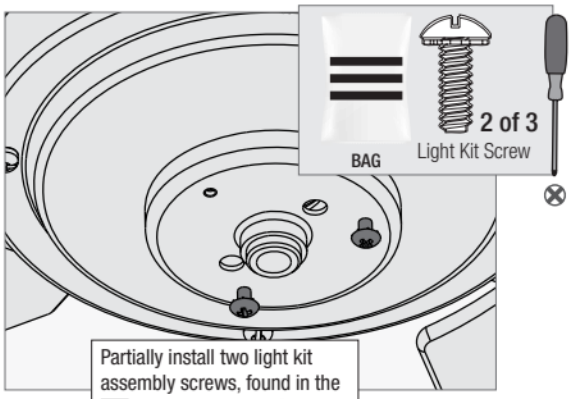

Partially install two light kit assembly screws, found in the ≡ hardware bag, halfway into the motor housing as shown. It does not matter which two screw holes you choose.

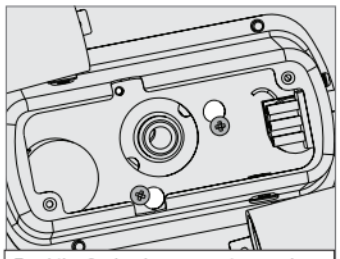

Feed the 9-pin plug connector coming from the bottom of the motor housing through the center hole in the light kit assembly. Align the keyhole slots in the top of the light kit assembly with the partially installed assembly screws. Wrap the keyhole slots around the screws and twist counterclockwise.

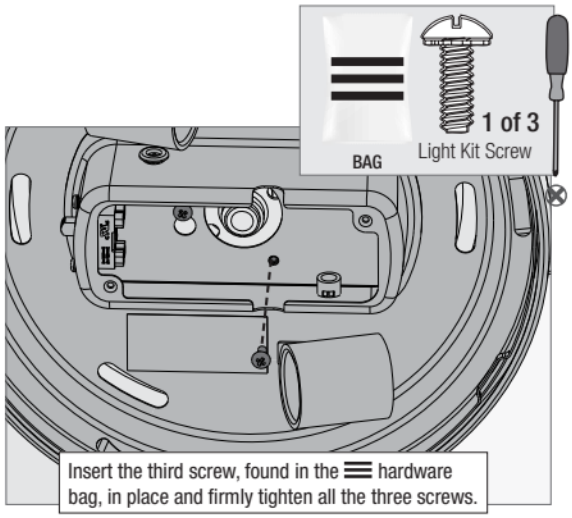

Insert the third screw, found in the ≡ hardware bag, in place and firmly tighten all the three screws.

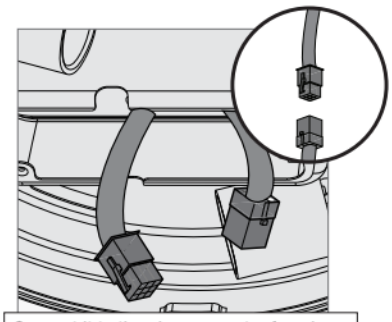

Connect it to the plug connector found in the switch housing area of the light kit assembly. Make sure to line up the colored markings on the connectors.

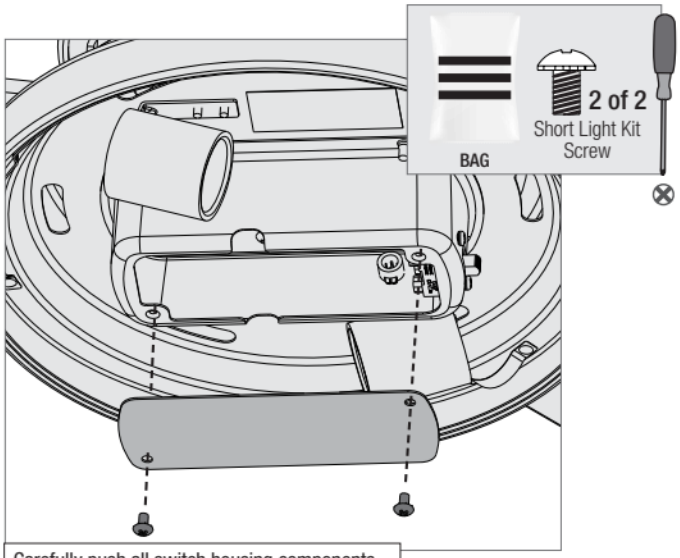

Carefully push all switch housing components into the switch housing, then install the switch housing plate using two short light kit assembly screws, found in the ≡ hardware bag.

⚠ WARNING

FAN FALL HAZARD
Make sure all screws are tight to secure the light fixture.

Note:

Fan style may vary.

Installing the Globe

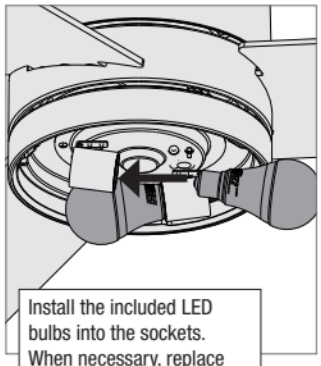

Install the included LED bulbs into the sockets. When necessary, replace with bulbs of same wattage.

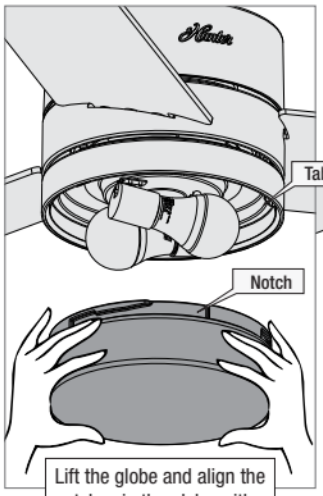

Lift the globe and align the notches in the globe with the tabs in the light kit.

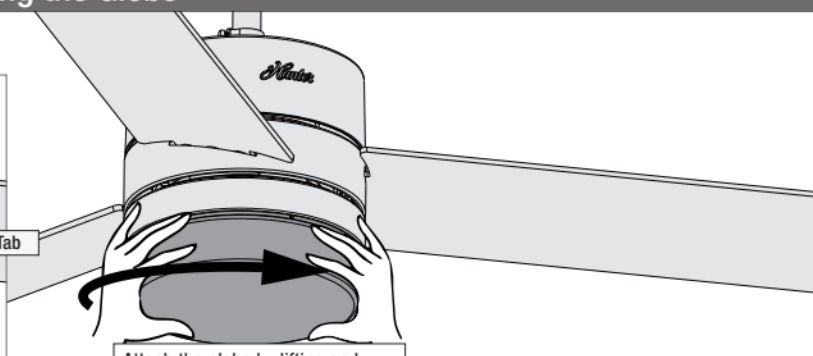

Attach the globe by lifting and turning clockwise one third of a full turn of the globe until it stops.

NOTE: Check to ensure proper engagement.

Note:

Fan style may vary.

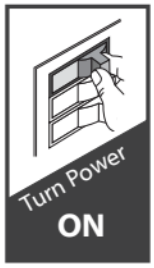

For your convenience, a remote function card is packed in with your remote.

To access the battery compartment, remove the the battery door to the transmitter assembly.

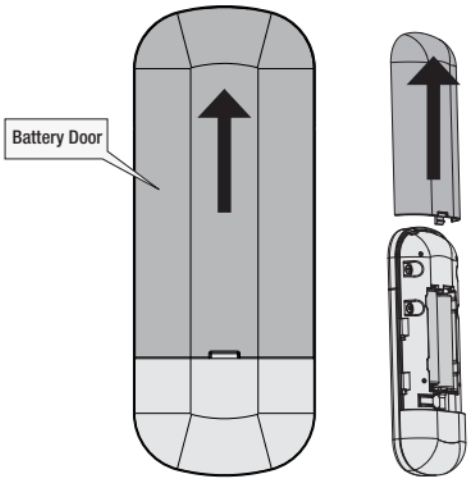

Install two AAA batteries, found in the remote control hardware bag, into the transmitter. Clean the battery contacts prior to installing the batteries. Please contact your local battery recycling center for proper battery disposal information.

⚠IMPORTANT

- Always purchase the correct size and grade of battery most suitable for the intended use.
- Replace all batteries of a set at the same time.
- Clean the battery contacts and also those of the device prior to battery installation.
- Ensure the batteries are installed correctly with regard to polarity (+ and -).
- Remove batteries from equipment which is not to be used for an extended period of time.
- Remove used batteries promptly.

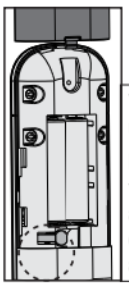

The remote transmitter is already paired to the receiver and ready to use. **Dimming mode is on by default.**

Note: If your need to pair your remote, turn fan power off and back on at the wall switch. Within 3 minutes, press and hold both the Fan Off button and the High button for 4 seconds to pair the remote. To prevent faulty operation, please ensure all other ceiling fans within range are turned off at the wall switch while pairing.

NOTICE: DIMMING MODE

To toggle Dimming Mode on or off, long press the "Fan Speed Up" button and "Fan Speed Down" button.

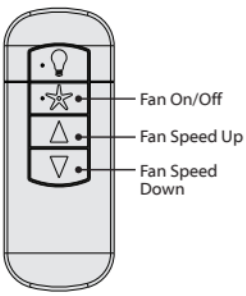

The Fan On/Off button turns the fan on or off. Adjust the fan speed using the "Fan Speed Up" or "Fan Speed Down" directional buttons.

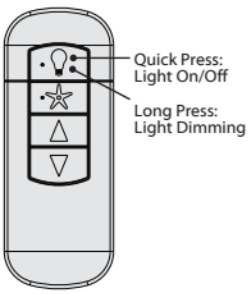

Quickly press the Light button to turn the lights off and on. Hold the Light button to raise and dim the light level.

Remote Function Guide

Key Press	Function
+ Quick Press	Light On/Off
+ Long Press	Light Dimming
+ Quick Press	Fan On/Off
△ + Quick Press	Raise Fan Speed
▽ + Quick Press	Lower Fan Speed
Long Press △	Fan High
Long Press ▽	Fan Low
Long Press ▽ + △	Dimming Mode On/Off

Controlling Your Fan

For your convenience, a remote function card is packed in with your remote.

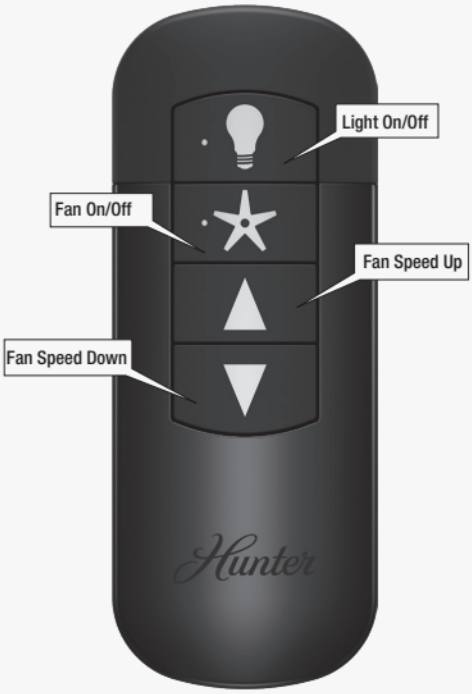

Note:

Fan style may vary.

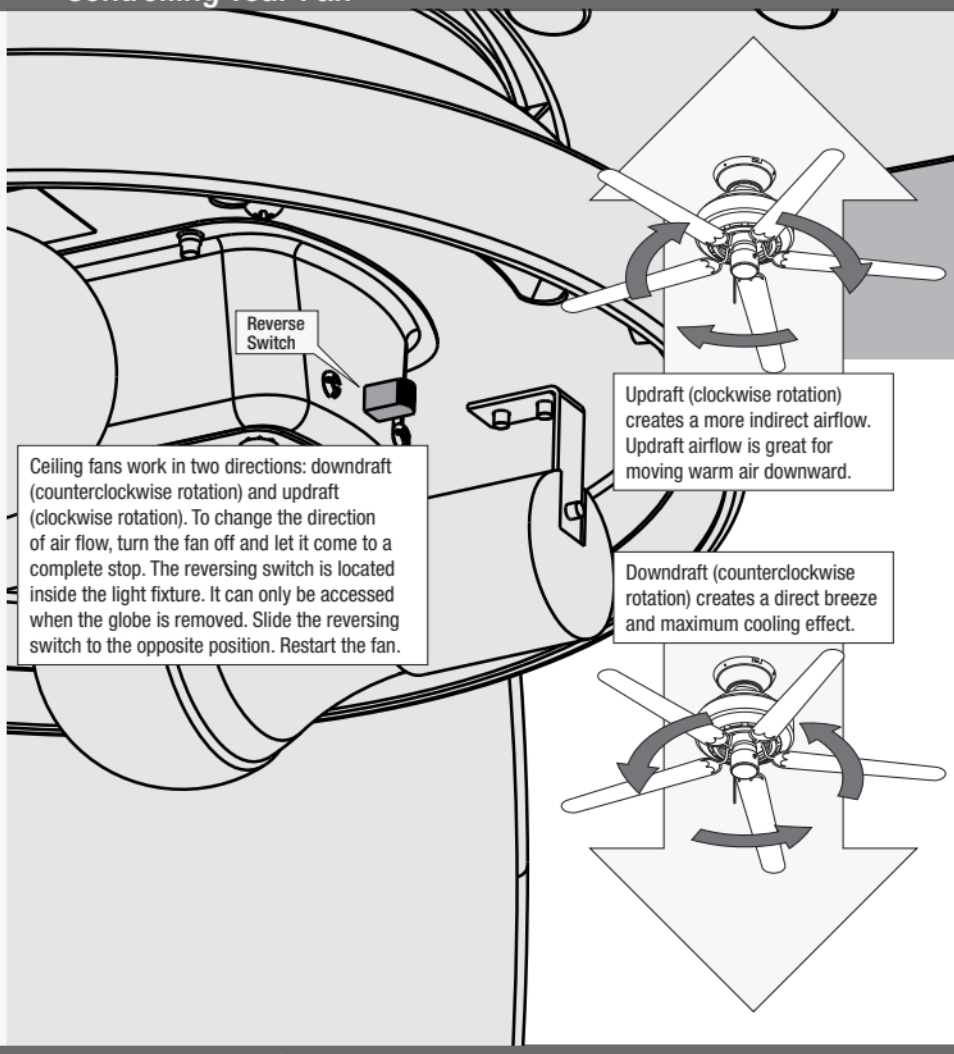

Troubleshooting

Fan Doesn't Work

- Make sure power switch is on.
- Push the motor reversing switch firmly left or right to ensure that it is engaged.
- Check the circuit breaker to ensure the power is turned on.
- Make sure the blades spin freely.
- Turn off power from the circuit breaker, then loosen the canopy and check all the connections according to the wiring diagram.
- Check the plug connection in the switch housing.

Excessive Wobbling

- Make sure the blades are properly installed on the blade iron posts.
- Turn the power off, support the fan carefully, and check that the hanger ball is properly seated.

Noisy Operation

- Make sure the blades are properly installed.
- Check to see if any of the blades are cracked. If so, replace all of the blades.

Remote Control of Fan is Erratic

- Make sure the battery is installed correctly.
- Install a fresh battery.

Remote Only Works Close to Fan

- Change battery.

Remote Pairing Issues

1. To prevent faulty operation, please ensure all other ceiling fans within range are turned off at the wall switch while pairing.
2. If your need to pair your remote, turn fan power off and back on at the wall switch. Within 3 minutes, press and hold both the Fan Off button and the High button for 4 seconds to pair the remote.

Multiple Remote Issues

- If you have multiple remotes or multiple remote-controlled fans installed on the same circuit breaker and you are experiencing interference or faulty operation of your remote controls, please go to www.HunterFan.com/FAQs and click "How do I properly install multiple remote-controlled fans?" for information on how to correct this issue.

Hunter Pro Tip:

Cleaning the Fan
Use soft brushes or cloths to prevent scratching. Cleaning products may damage the finishes.

Limited Lifetime Warranty

Hunter Fan Company grants this limited warranty to the original purchaser of this Hunter ceiling fan. This document can be found at www.HunterFan.com.
Thank you for choosing Hunter!

How Can Warranty Service Be Obtained?

Proof of purchase is required when requesting warranty service. The original purchaser must present a sales receipt or other document that establishes proof of purchase. Hunter, at its sole discretion, may accept a gift receipt. To obtain service, contact Hunter Fan Company online or by phone.

www.HunterFan.com/Support/Contact-Us/
1.888.830.1326
Monday - Friday 8am - 6pm CST. Saturday 11am - 4pm CST (English or Español)

Please do not ship your fan or any fan parts to Hunter. Delivery will be refused.

What Does This Warranty Cover?

Motor — Limited Lifetime Warranty
If any part of your ceiling fan motor fails during your ownership of the fan due to a defect in material or workmanship, as determined solely by Hunter, Hunter will provide you with a replacement fan free of charge.* The foregoing limited warranty applies only to the motor itself and does not apply to electronic controls – such as remote control transmitters, remote control receivers, or capacitors – used in conjunction with the motor. Such electronic control items are included in the one-year limited warranty below.

Other — One-Year Limited Warranty
Except as otherwise indicated throughout this warranty, if any part of your Hunter ceiling fan fails at any time within one year of the date of purchase due to a defect in material or workmanship, as determined solely by Hunter, Hunter will provide a replacement part free of charge.*

Light Kits — Warranty May Vary
Light kits are included in the one-year limited warranty. However, you may qualify for additional warranty coverage if your fan includes one of the following:

- **LED Light Kits — Three-Year Limited Warranty**
  If your LED light kit module (not including glass components) or LED bulb fails at any time within three years of the date of purchase due to a defect in material or workmanship, as determined solely by Hunter, Hunter will provide a replacement part free of charge.*

What Does This Warranty NOT Cover?

Labor Excluded. This warranty does not cover any costs or fees associated with the labor (including electrician's fees) required to install, remove, or replace a fan or any fan parts. There is no warranty for light bulbs (except where otherwise noted); remote control batteries; fans purchased or installed outside the United States; fans owned by someone other than the original purchaser; fans for which proof of purchase has not been established; fans purchased from an unauthorized dealer; ordinary wear and tear; minor cosmetic blemishes; refurbished fans; and fans that are damaged due to any of the following: improper installation, misuse, abuse, improper care, failure to follow Hunter instructions, accidental damage caused by the fan owner or related parties, modifications to the fan, improper or incorrectly performed maintenance or repair, improper voltage supply or power surge, use of improper parts or accessories, failure to provide maintenance to the fan, or acts of God (e.g. flood).
ORIGINAL PURCHASER'S SOLE AND EXCLUSIVE REMEDY FOR A CLAIM OF ANY KIND WITH RESPECT TO THIS PRODUCT SHALL BE THE REMEDIES SET FORTH HEREIN. HUNTER FAN COMPANY IS NOT RESPONSIBLE FOR CONSEQUENTIAL OR INCIDENTAL DAMAGES, DUE TO PRODUCT FAILURE, WHETHER ARISING OUT OF BREACH OF WARRANTY, BREACH OF CONTRACT, OR OTHERWISE. Some States do not allow the exclusion or limitation of incidental or consequential damages, so the above limitation or exclusion may not apply to you.
ANY IMPLIED WARRANTIES OF MERCHANTABILITY OR FITNESS FOR A PARTICULAR PURPOSE APPLICABLE TO THIS PRODUCT ARE LIMITED IN DURATION TO THE PERIOD OF COVERAGE OF THE APPLICABLE LIMITED WARRANTIES SET FORTH ABOVE. Some States do not allow limitations on how long an implied warranty lasts, so the above limitation may not apply to you.

How Does State Law Affect Warranty Coverage?

This warranty gives you specific legal rights. You may also have other rights which vary from state to state.

Downrod

If you need a different downrod length follow these steps:

Follow steps 1-5 to remove standard downrod pipe

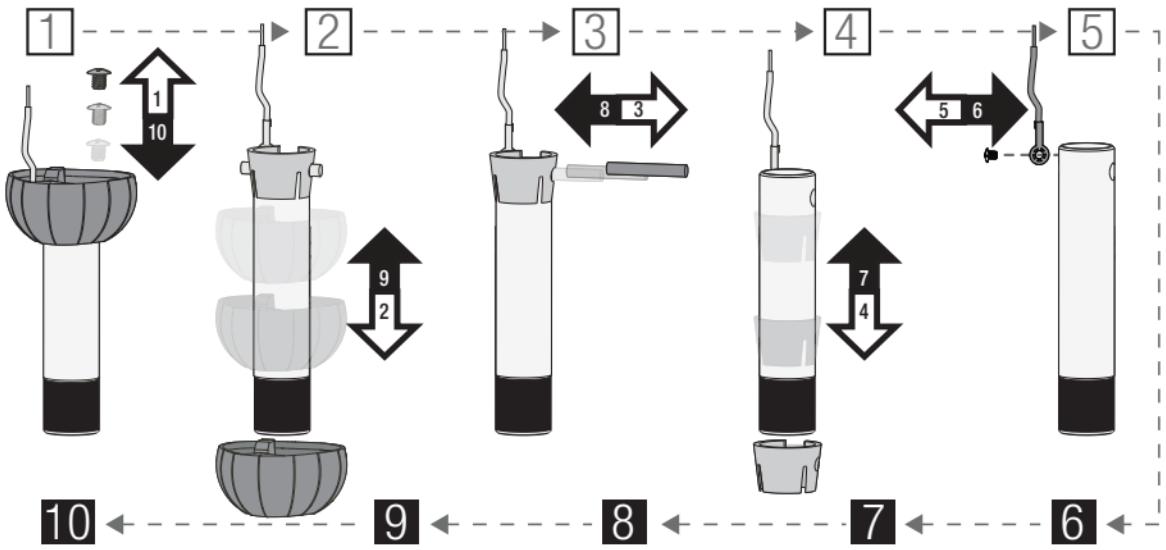

Follow steps 6-10 to reassemble with new downrod

⚠ WARNING

FAN FALL HAZARD
To prevent **SERIOUS INJURY** or **DEATH:**

- **ALWAYS** follow the downrod assembly instructions exactly.
- **VERIFY** the downrod is assembled correctly by firmly pulling on the hanger ball.
- **Pin must be reinserted to secure downrod assembly.**



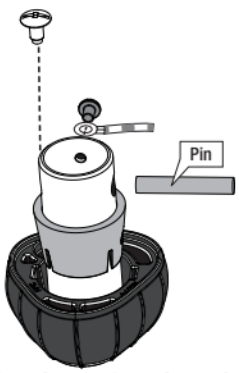

Here is another view of the downrod assembly unassembled.

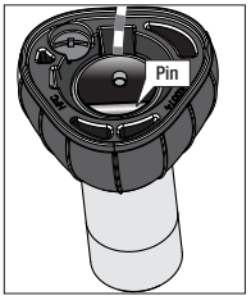

Assembled downrod should look like this