Model # 50303 & 50304 & 50475

USE AND CARE GUIDE

CEILING FAN

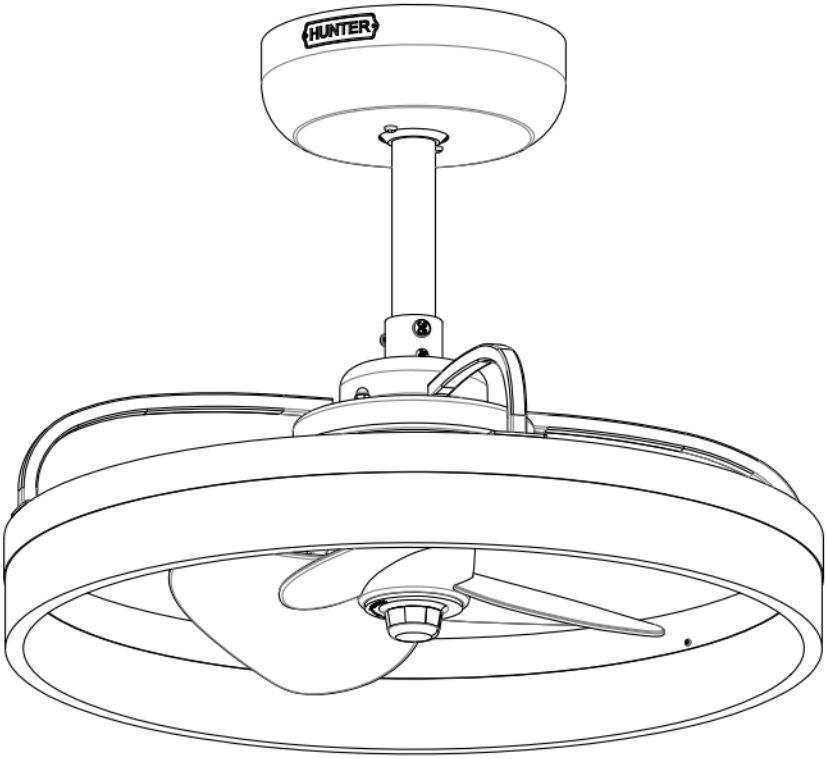

Net Weight 8.73 lbs (3.96 kg)

Congratulations on purchasing your new Hunter® ceiling fan!

The ceiling fan you purchased will provide comfort and performance in your home or office for many years. This instruction manual contains complete instructions for installing and operating your fan. We are proud of our work and appreciate the opportunity to supply you with the best ceiling fan available anywhere in the world.

We are here to help!

This Instruction Manual is designed to make installation as simple as possible. While working through this Instruction Manual, keep your smartphone or tablet nearby. If you are unfamiliar or uncomfortable with wiring, contact a qualified electrician. We also provide telephone support at 1.888.830.1326 or visit us
at HunterFan.com.

READ and SAVE These Instructions

WARNING

Warning

w.1 - To reduce the risk of fire, electrical shock, or personal injury, mount fan directly from building structure and/or an outlet box marked acceptable for fan support of 70 lbs (31.8 kg) and use the mounting screws provided with the outlet box.

w.2 - To avoid possible electrical shock, before installing or servicing your fan, disconnect the power by turning off the circuit breakers to the outlet box and associated wall switch location. If you cannot lock the circuit breakers in the off position, securely fasten a prominent warning device, such as a tag, to the service panel.

w.3 – To reduce the risk of electric shock, this fan must be installed with an isolating wall control/switch.

w.4 - To reduce the risk of personal injury, do not bend the blade brackets when installing the blade brackets, balancing the blades, or cleaning the fan. Do not insert foreign objects in between rotating fan blades.

w.5 - This appliance can be used by children aged from 8 years and above and persons with reduced physical, sensory or mental capabilities or lack of experience and knowledge if they have been given supervision or instruction concerning use of the appliance in a safe way and understand the hazards involved. Children shall not play with the appliance. Cleaning and user maintenance shall not be made by children without supervision. It is recommended that children be supervised to ensure that they are not using the appliance improperly.

w.6 - To reduce the risk of fire or electric shock or injury to persons, do not use replacement parts that have not been recommended by the manufacturer (e.g. parts made at home using a 3D printer).

Caution

c.1 - All wiring must be in accordance with national and local electrical codes ANSI/NFPA 70. If you are unfamiliar with wiring, use a qualified electrician.

c.2 - Use only Hunter replacement parts.

This equipment has been tested and found to comply with the limits for a Class B digital device, pursuant to part 15 of the FCC Rules. These limits are designed to provide reasonable protection against harmful interference in a residential installation. This equipment generates, uses and can radiate radio frequency energy and if not installed and used in accordance with the instructions may cause harmful interference to radio communications.

However, there is no guarantee that interference will not occur in a particular installation. If this equipment does cause harmful interference to radio or television reception, which can be determined by turning the equipment off and on, the user is encouraged to try to correct the interference by one or more of the following measures:

- Reorient or relocate the receiving antenna.
- Increase the separation between the equipment and receiver.
- Connect the equipment into an outlet on a circuit different from that to which the receiver is connected.
- Consult the dealer or an experienced radio/TV technician for help.

Caution: modifications not approved by the party responsible for compliance could void user's authority to operate the equipment.

This device complies with Part 15 of the FCC Rules. Operation is subject to the following two conditions: (1) This device may not cause harmful interference, and (2) this device must accept any interference received, including interference that may cause undesired operation.

Intertek

This product CONFORMS TO UL STD.507

Here are tools you'll need to complete your installation:

Ladder

Screwdriver

Short Screwdriver

Wire Strippers

OPTIONAL

If mounting to a support structure, you will also need these tools.

Drill

9/64" Drill Bit

© 2025 Hunter Fan Company
7130 Goodlett Farms Pkwy, Suite 400
Memphis TN 38016

Limited Warranty

Hunter Fan Company grants this limited warranty to the original purchaser of this Hunter ceiling fan. This document can be found at www.HunterFan.com.
Thank you for choosing Hunter!

How Can Warranty Service Be Obtained?

Proof of purchase is required when requesting warranty service. The original purchaser must present a sales receipt or other document that establishes proof of purchase. Hunter, at its sole discretion, may accept a gift receipt. To obtain service, contact Hunter Fan Company online or by phone.

www.HunterFan.com/Support/Contact-Us/
1-888-830-1326

Please do not ship your fan or any fan parts to Hunter. Delivery will be refused.

What Does This Warranty Cover?

Motor — Two–Year Limited Warranty
If any part of your ceiling fan motor fails during your ownership of the fan due to a defect in material or workmanship, as determined solely by Hunter, Hunter will provide you with a replacement fan free of charge.* The foregoing limited warranty applies only to the motor itself and does not apply to electronic controls – such as remote control transmitters, remote control receivers, or capacitors – used in conjunction with the motor. Such electronic control items are included in the one-year limited warranty below.

Other — One-Year Limited Warranty
Except as otherwise indicated throughout this warranty, if any part of your Hunter ceiling fan fails at any time within one year of the date of purchase due to a defect in material or workmanship, as determined solely by Hunter, Hunter will provide a replacement part free of charge.*

** If no replacement product/part can be provided for your fan, we will provide a comparable or superior replacement product/part at the sole discretion of Hunter.*

What Does This Warranty NOT Cover?

Labor Excluded. This warranty does not cover any costs or fees associated with the labor (including electrician's fees) required to install, remove, or replace a fan or any fan parts. There is no warranty for light bulbs (except where otherwise noted); remote control batteries; fans purchased or installed outside the United States; fans owned by someone other than the original purchaser; fans for which proof of purchase has not been established; fans purchased from an unauthorized dealer; ordinary wear and tear; minor cosmetic blemishes; refurbished fans; and fans that are damaged due to any of the following: improper installation, misuse, abuse, improper care, failure to follow Hunter instructions, accidental damage caused by the fan owner or related parties, modifications to the fan, improper or incorrectly performed maintenance or repair, improper voltage supply or power surge, use of improper parts or accessories, failure to provide maintenance to the fan, or acts of God (e.g. flood).
ORIGINAL PURCHASER'S SOLE AND EXCLUSIVE REMEDY FOR A CLAIM OF ANY KIND WITH RESPECT TO THIS PRODUCT SHALL BE THE REMEDIES SET FORTH HEREIN. HUNTER FAN COMPANY IS NOT RESPONSIBLE FOR CONSEQUENTIAL OR INCIDENTAL DAMAGES, DUE TO PRODUCT FAILURE, WHETHER ARISING OUT OF BREACH OF WARRANTY, BREACH OF CONTRACT, OR OTHERWISE. Some States do not allow the exclusion or limitation of incidental or consequential damages, so the above limitation or exclusion may not apply to you.
ANY IMPLIED WARRANTIES OF MERCHANTABILITY OR FITNESS FOR A PARTICULAR PURPOSE APPLICABLE TO THIS PRODUCT ARE LIMITED IN DURATION TO THE PERIOD OF COVERAGE OF THE APPLICABLE LIMITED WARRANTIES SET FORTH ABOVE. Some States do not allow limitations on how long an implied warranty lasts, so the above limitation may not apply to you.

How Does State Law Affect Warranty Coverage?

This warranty gives you specific legal rights. You may also have other rights which vary from state to state.

Table of Contents

Unpacking Instructions 4
How to Assemble Your Ceiling Fan 5
How to Assemble Your Ceiling Fan (continued) 6
Energy Efficient Use of Ceiling Fans 7
Electrical and Structural Requirements 7
How to Hang Your Ceiling Fan 8
How to Wire Your Ceiling Fan. 9
How to Wire Your Ceiling Fan (continued) 10
How to Install Your Canopy Housing. 11
How to Install Your Fan blade. 11
How to Operate Your Ceiling Fan 12
How to Operate Your Ceiling Fan (continued) 14
How to Install Your Remote Control Cradle. 15
Maintenance 16
Troubleshooting 17
Parts List 18
Exploded-View Illustration 19

This manual is designed to make it as easy as possible for you to assemble, install, operate and maintain your ceiling fan

⚠ WARNING

Before assembling your ceiling fan, refer to section on proper method of wiring your fan (page 10). If you feel you do not have enough wiring knowledge or experience, have your fan installed by a licensed electrician.

Unpacking Instructions

For your convenience, check-off boxes are provided next to each step. As each step is completed, place a check mark in the box. This will ensvre that all steps have been completed and will be helpful in finding your place should you be interrupted.

⚠ WARNING

Do not install or use fan if any part is damaged or missing. This product is designed to use only those parts supplied with this product and/or any accessories designated specifically for use with this product by Hunter. Substitution of parts or accessories not designated for use with this product by Hunter could result in personal injury or property damage.

1. Check to see that you have received the following parts:

For additional reference, an Exploded View of parts is provided in the back section of this manual including part numbers.

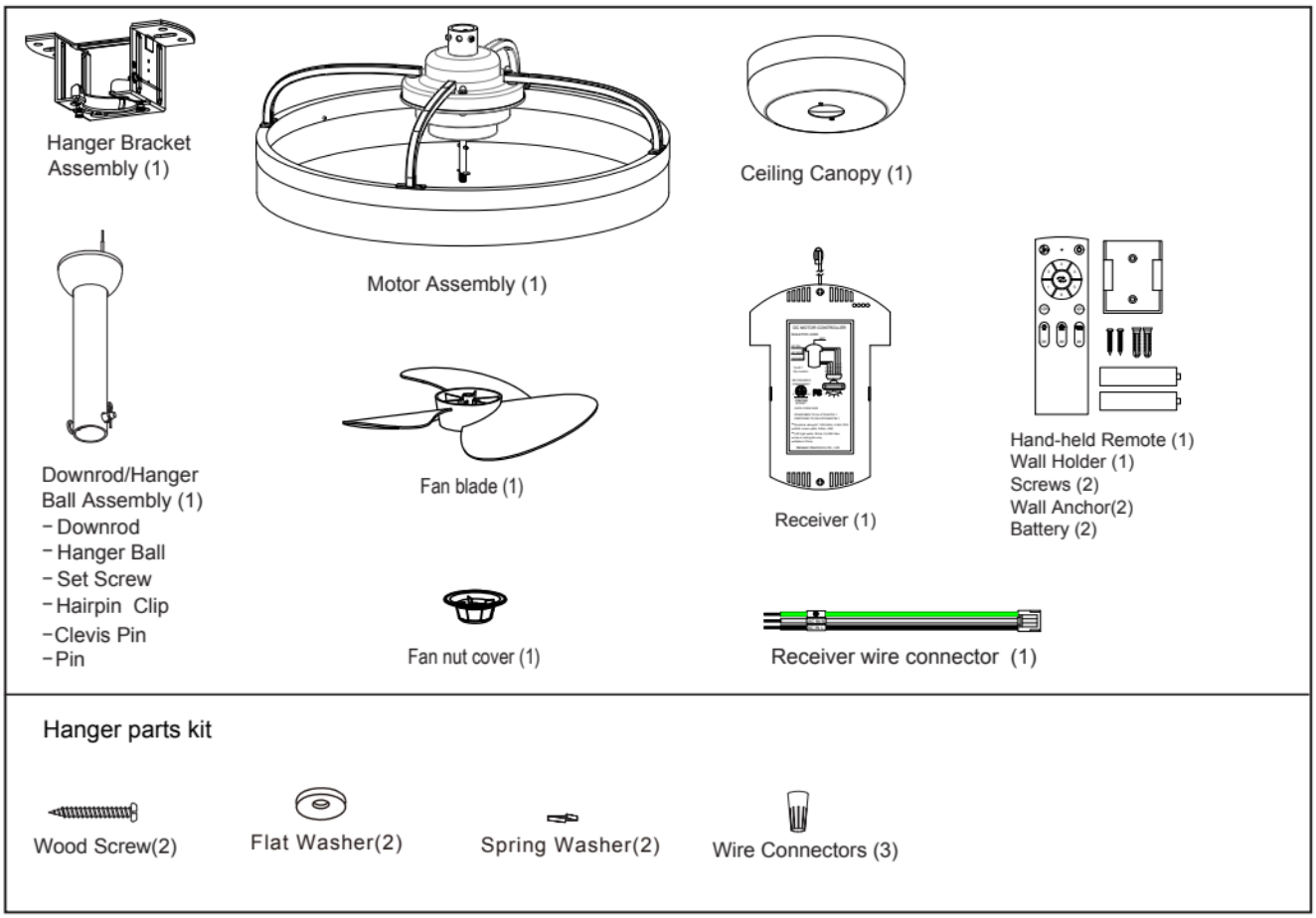

How to Assemble Your Ceiling Fan

☐ **1.** Remove the hanger ball portion from the dowrod/ hanger ball assembly by loosening the set screw in the hanger ball until the ball falls freely down the downrod. Remove the pin from the downrod, then remove the hanger ball. Retain the pin and hanger ball for reinstallation in Step 6. (Figure 1)

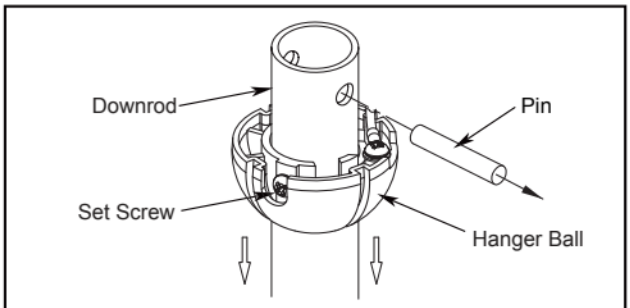

Figure 1

☐ **2.** Remove the hairpin clip and clevis pin from the bottom of the downrod. Retain the pin and clip for reinstallation in Step 4. (Figure 2)

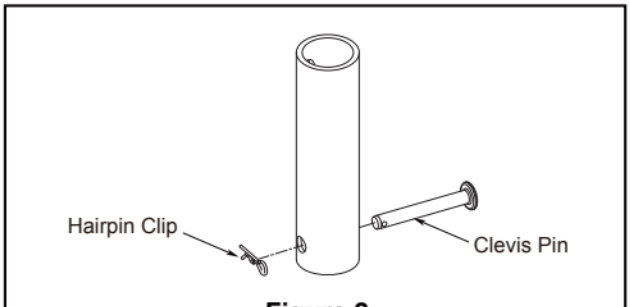

Figure 2

☐ **3.** Loosen the two set screws in the downrod support of the motor assembly. Route the wires through the downrod. (Figure 3)

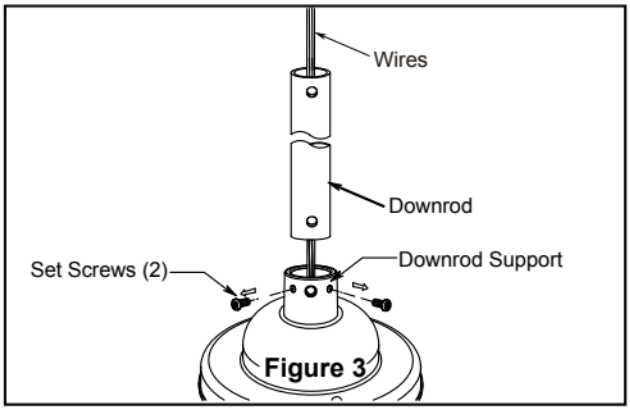

Figure 3

☐ 4. Slide downrod into the downrod support on top of the motor. Install the clevis pin by aligning the holes in the downrod support with holes in the downrod. Secure clevis pin with hairpin clip. Tighten the two set screws in the downrod support. (Figure 4)

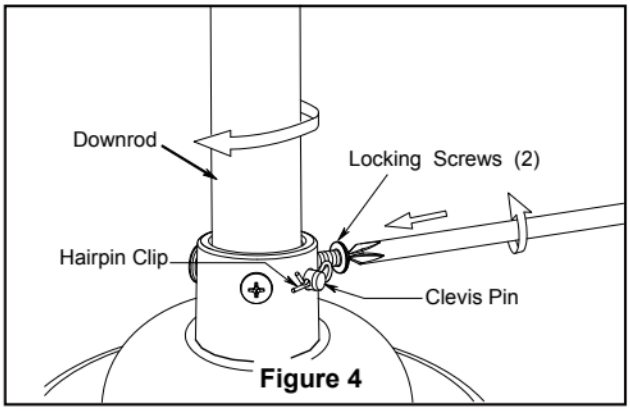

Figure 4

⚠ WARNING

FAN FALL HAZARD
To prevent **SERIOUS INJURY OR DEATH:**

- **ALWAYS** install the clevis pin into the downrod and hairpin clip into the clevis pin.
- **VERIFY** the clevis pin and hairpin clip are properly installed.

How to Assemble Your Ceiling Fan (continued)

☐ **5.** Route wires through ceiling canopy.(Figure 5)

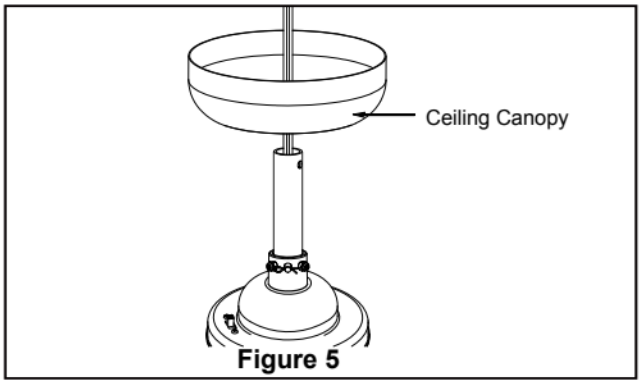

Figure 5

☐ **6.** Reinstall the hanger ball on the downrod as follows. Route the motor wire and light wire and green ground wire through the hanger ball. Position the pin through the two holes in the downrod and align the hanger ball so the pin is captured in the groove in the top of the hanger ball. Pull the hanger ball up tight against the pin. Securely tighten the set screw in the hanger ball. A loose set screw could create fan wobble. (Figure 6)

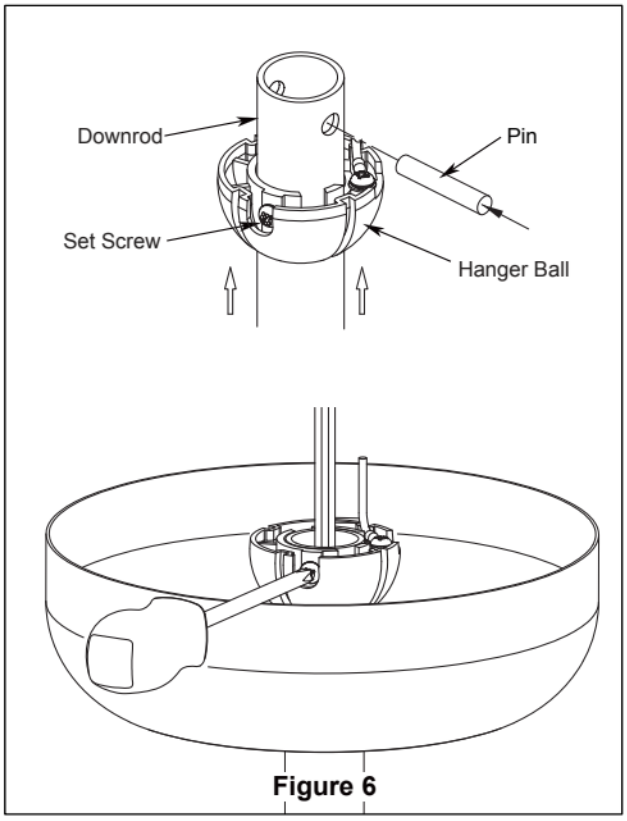

Figure 6

☐ **7.** Cut off excess Green ground wire approximately 6 to 9 inches above top of the downrod. Strip insulation off 1/2 inch from the end of Green ground wire. (Figure 7)

CAUTION
All set screws must be checked, and retightened where necessary before installation.

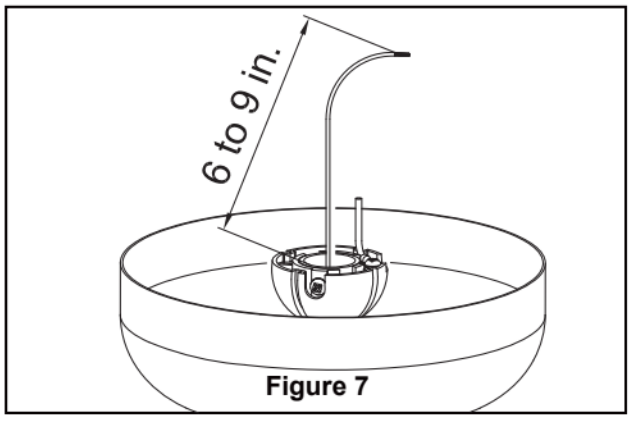

Figure 7

☐ **8.** Remove the two screws in the hanger bracket and retain the screws for later. (Figure 8)

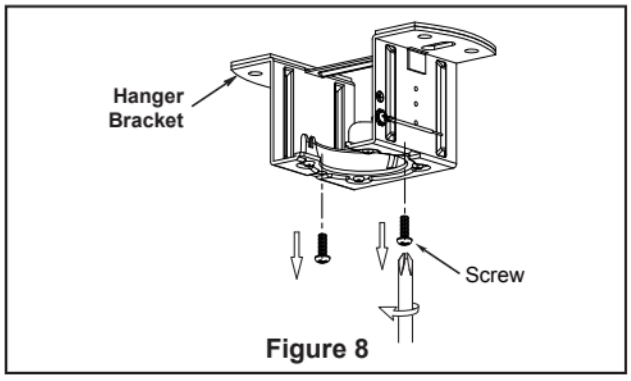

Figure 8

Energy Efficient Use of Ceiling Fans

Ceiling fan performance and energy savings rely heavily on the proper installation and use of the ceiling fan. Here are a few tips to ensure efficient product performance.

Choosing the Appropriate Mounting Location
Ceiling fans should be installed, or mounted, in the middle of the room and at least 7 feet from floor to the blade and 18 inches from wall to the blade. If ceiling height allows, install the fan 8 feet from floor to the blade for optimal airflow.

Turn Off When Not in the Room
Ceiling fans cool people, not rooms. If the room is unoccupied, turn off the ceiling fan to save energy.

Using the Ceiling Fan Year Round
Summer Season: Use the ceiling fan in the clockwise direction. The airflow produced by the ceiling fan creates a wind-chill effect, making you “feel” cooler. Select a fan speed that provides a comfortable breeze, lower speeds consume less energy.

Winter Season: Reverse the motor and operate the ceiling fan at low speed in the counterclockwise direction. This produces a gentle updraft, which forces warm air near the ceiling down into the occupied space. Remember to adjust your thermostat when using your ceiling fan-additional energy and dollar savings could be realized with this simple step!

Electrical and Structural Requirements

Brace use (Figure 1)
Paired with a deep box, this hanger is meant to span between two joists and takes the place of wooden blocking.

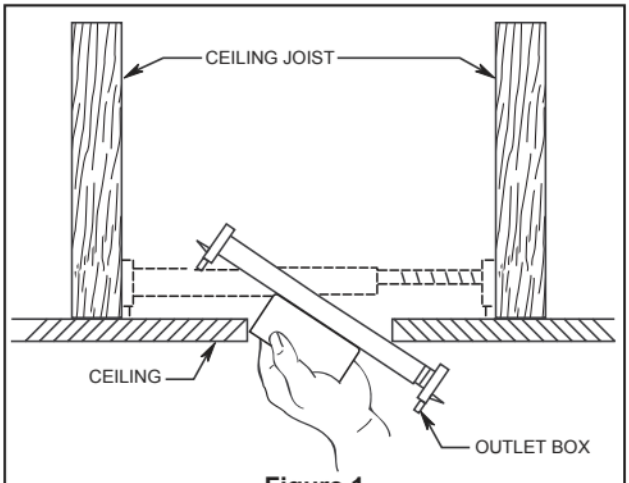

Figure 1

⚠ WARNING

To reduce the risk of fire, electrical shock, or personal injury, mount fan to outlet box marked acceptable for fan support of 31.8 kg (70 lbs) or less. Use screws supplied with outlet box. Most outlet boxes commonly used for support of light fixtures are not acceptable for fan support and may need to be replaced. Consult a qualified electrician if in doubt.

If your fan is to replace an existing light fixture, turn electricity off at the main fuse box at this time and remove the existing light fixture.

⚠ WARNING

Turning off wall switch is not sufficient. To avoid possible electrical shock, be sure electricity is turned off at the main fuse box before wiring. All wiring must be in accordance with National and Local codes and the ceiling fan must be properly grounded as a precaution against possible electrical shock.

⚠ WARNING

To avoid fire or shock, follow all wiring instructions carefully. Any electrical work not described in these instructions should be done or approved by a licensed electrician.

⚠ WARNING

Do not operate this fan with a variable (Rheostat) wall controller or dimmer switch. Doing so could result in damage to the ceiling fan's remote control unit.

How to Hang Your Ceiling Fan

⚠ WARNING

To avoid possible electrical shock, before installing your fan, disconnect the power by turning off the circuit breakers to the outlet box associated with the wall switch location.

NOTE: If you are not sure if the outlet box is grounded, contact a licensed electrician for advice, as it must be grounded for safe operation.

⚠ WARNING

The fan must be hung with at least 7' of clearance from floor to blades. (Figure 2)

☐ **1.** Securely attach the hanger bracket to the outlet box using the outlet box screws and washers supplied with the outlet box. (Figure 3)

☐ **2.** Make sure the electrical supply wires, including the hanger bracket grounding wire are pulled through the downrod, between the hanger bracket and the outlet box so that electrical connections can be made later.

⚠ WARNING

The outlet box must be securely anchored. Hanger bracket must seat firmly against outlet box. If the outlet box is recessed, remove wall board until bracket contacts box. If bracket and /or outlet box are not securely attached, the fan could wobble or fall.

☐ **3.** Carefully lift the fan and seat the downrod/hanger ball assembly onto the hanger bracket that was just attached to the outlet box. Be sure the groove in the ball is lined up with tab on the hanger bracket. (Figure 4)

⚠ WARNING

Failure to seat tab in groove could cause damage to electrical wires and possible shock or fire hazard.

⚠ WARNING

To avoid possible shock, do not pinch wires between the hanger ball assembly and the hanger bracket.

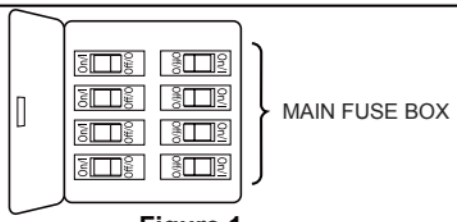

Figure 1

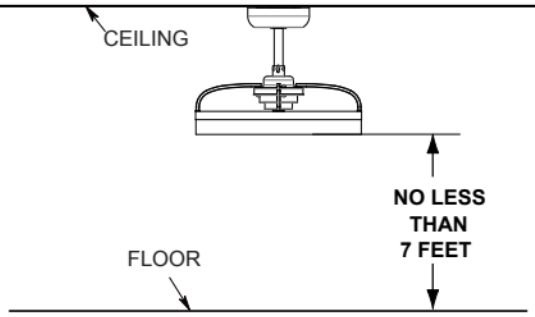

Figure 2

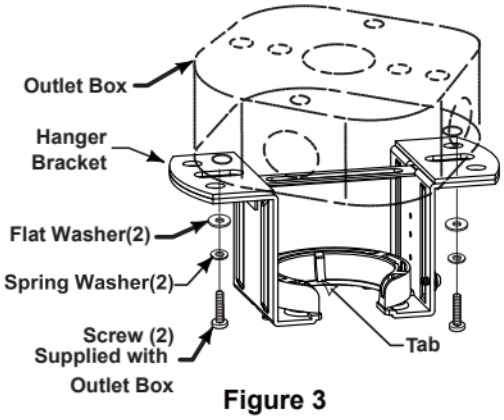

Figure 3

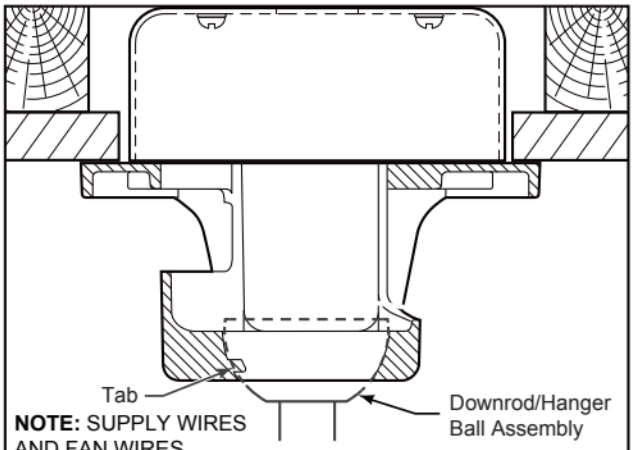

NOTE: SUPPLY WIRES AND FAN WIRES OMITTED FOR CLARITY

Figure 4

How to Wire Your Ceiling Fan

⚠ WARNING

To avoid possible electrical shock, be sure electricity is turned off at the main fuse box before wiring. (Figure 1)

NOTE: *If you are not sure if the outlet box is grounded, contact a licensed electrician for advice, as it must be grounded for safe operation.*

CAUTION: INCORRECT WIRE CONNECTION WILL DAMAGE THIS RECEIVER.

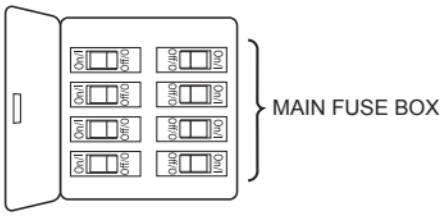

Figure 1

☐ **1.** Slide the receiver into the hanger bracket with the flat side up towards the ceiling. as shown in. (Figure 2)

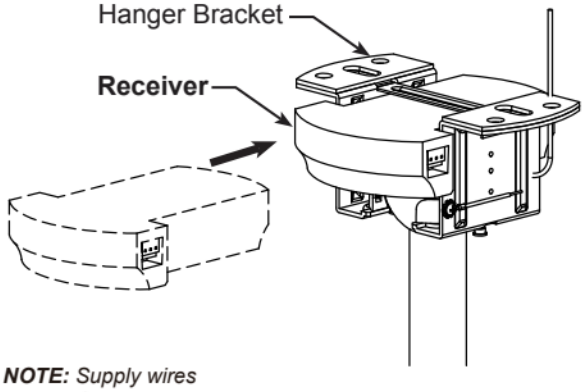

NOTE: *Supply wires omitted for clarity.*

Figure 2

How to Wire Your Ceiling Fan (continued)

NOTE: *If you feel that you do not have enough electrical wiring knowledge or experience, have your fan installed by a licensed electrician.*

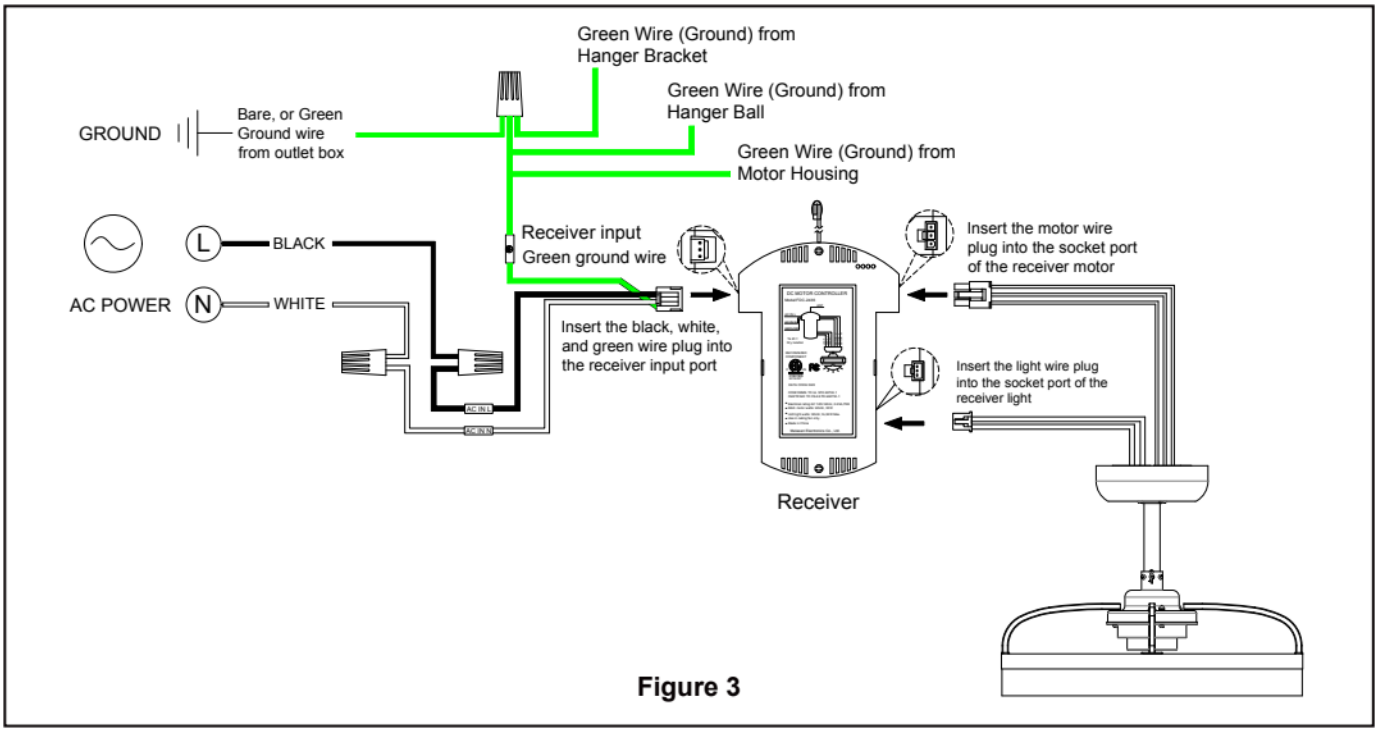

Figure 3

☐ **2. Connect green wires from Receiver input Green ground wire from hanger bracket and hanger ball and motor housing to bare (ground) wire from outlet box.**
Connect black wire from Receiver input marked "AC IN L" to black (ungrounded) supply wire using wire connector.
Connect white wire from Receiver input marked "AC IN N" to white (grounded) supply wire using wire connector.
Connect the motor plug wire to the receiver output corresponding motor female socket.
Connect the light plug wire to the receiver output corresponding light female socket.
(Figure 3)

⚠ WARNING

All wiring must be in accordance with national and local electrical codes ANSI/NFPA 70. If you are unfamiliar with wiring or in doubt, consult a qualified electrician.

HARDWARE USED:

WIRE CONNECTORS x 3

☐ **3.** After connections have been made, the wires should be spread apart with the grounded conductor and the equipment-grounding conductor on one side of the outlet box and the ungrounded conductor on the other side of outlet box, then turn leads upward and carefully push leads into the outlet box, with the white and green leads to one side of the box and the black leads to the other side. (Figure 4)

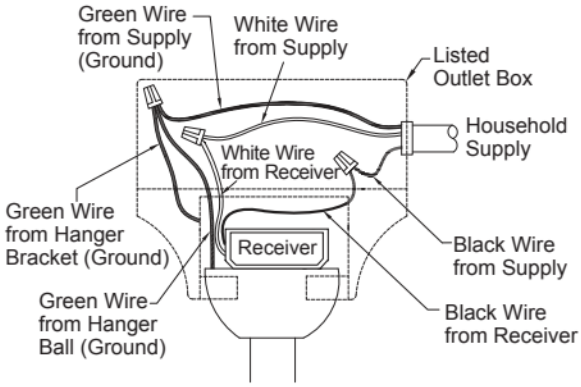

Place receiver in canopy

Figure 4

How to Install Your Canopy Housing

NOTE: This step is applicable after the necessary wiring is completed.

☐ 1. Align the canopy holes with the screw holes of the hanger. Install using the 2 screws previously removed and Tighten the 2 screws using the Short Screwdriver to fix the canopy, taking care not to pinch the wires. Tighten screws. (Figure 1)

⚠ WARNING

To avoid possible fire or shock, make sure that the electrical wires are completely inside the canopy housing and not pinched between the housing and the ceiling.

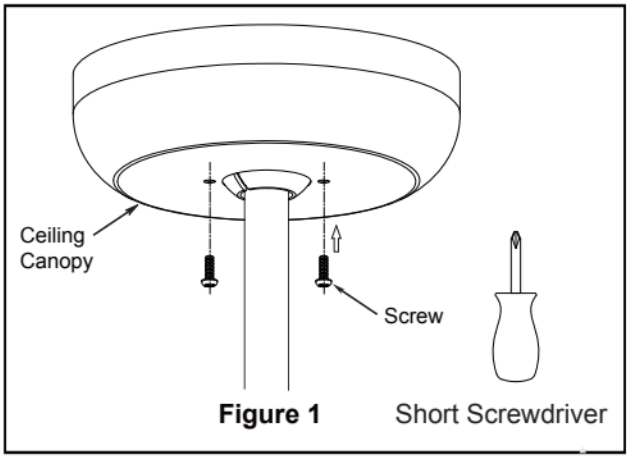

Figure 1

How to Install Your Fan blade

☐ **1.** Pull out the hairpin. (Figure 1)

Align the U-slot of the fan blade with the locating pin of the motor shaft. The pin should sink into the U-slot of the fan, then insert the hairpin into the side hole of the motor shaft and clamp it on the motor shaft. Finally, screw the fan nut cover into the Motor shaft and tighten it counterclockwise to fix the fan blade. (Figure 2)

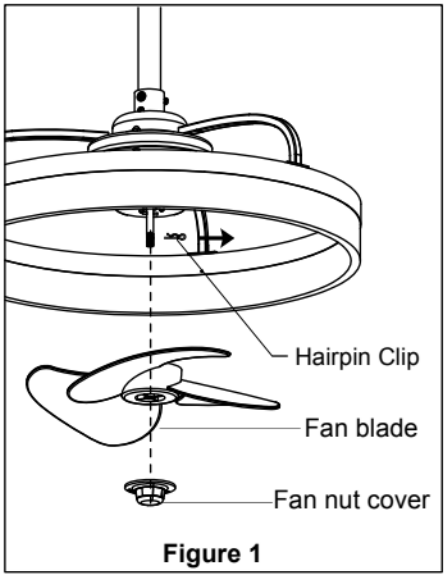

Figure 1

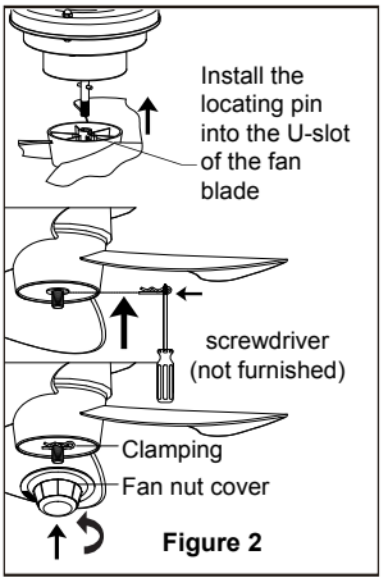

Figure 2

How to Operate Your Ceiling Fan

☐ **1. IMPORTANT:** Using a full range dimmer switch (not included) to control fan speed will damage the fan. To reduce the risk of fire or electrical shock, do not use a full range dimmer switch to control the fan speed. (Figure 1)

COMPATIBLE WALL SWITCHES

IF CONNECTED TO FIXTURE

Dimmer switches are not compatible.
Use simple wall switch.

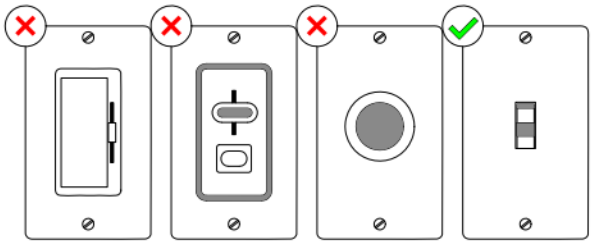

Figure 1

☐ **2.** Restore electrical power to the outlet box by turning the electricity on at the main fuse box. (Figure 2)

> **⚠ WARNING**
>
> **Check to see that all connections are tight, including ground, and that no bare wire is visible at the wire connectors, except for the ground wire. Do not operate fan until the blades are in place. Noise and fan damage could result.**

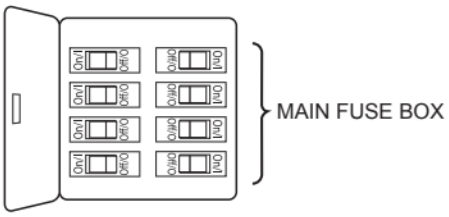

Figure 2

> **⚠ WARNING**
>
> **Do not operate this fan with a variable (Rheostat) wall controller or dimmer switch. Doing so could result in damage to the ceiling fan's remote control unit.**

☐ **3.** To make the fan operational, install the two AAA batteries included (If not used for long periods of time, remove battery to prevent damage to transmitter). Store the remote away from excessive heat or damp.(Figure 3)

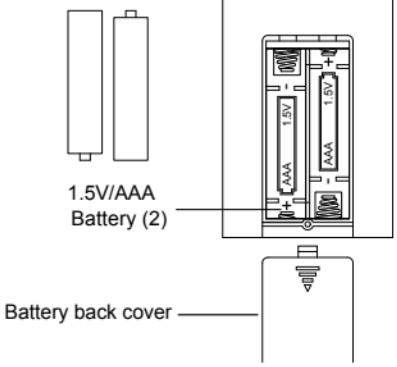

Figure 3

How to Operate Your Ceiling Fan (continued)

☐ Remote functions: (Figure 4)

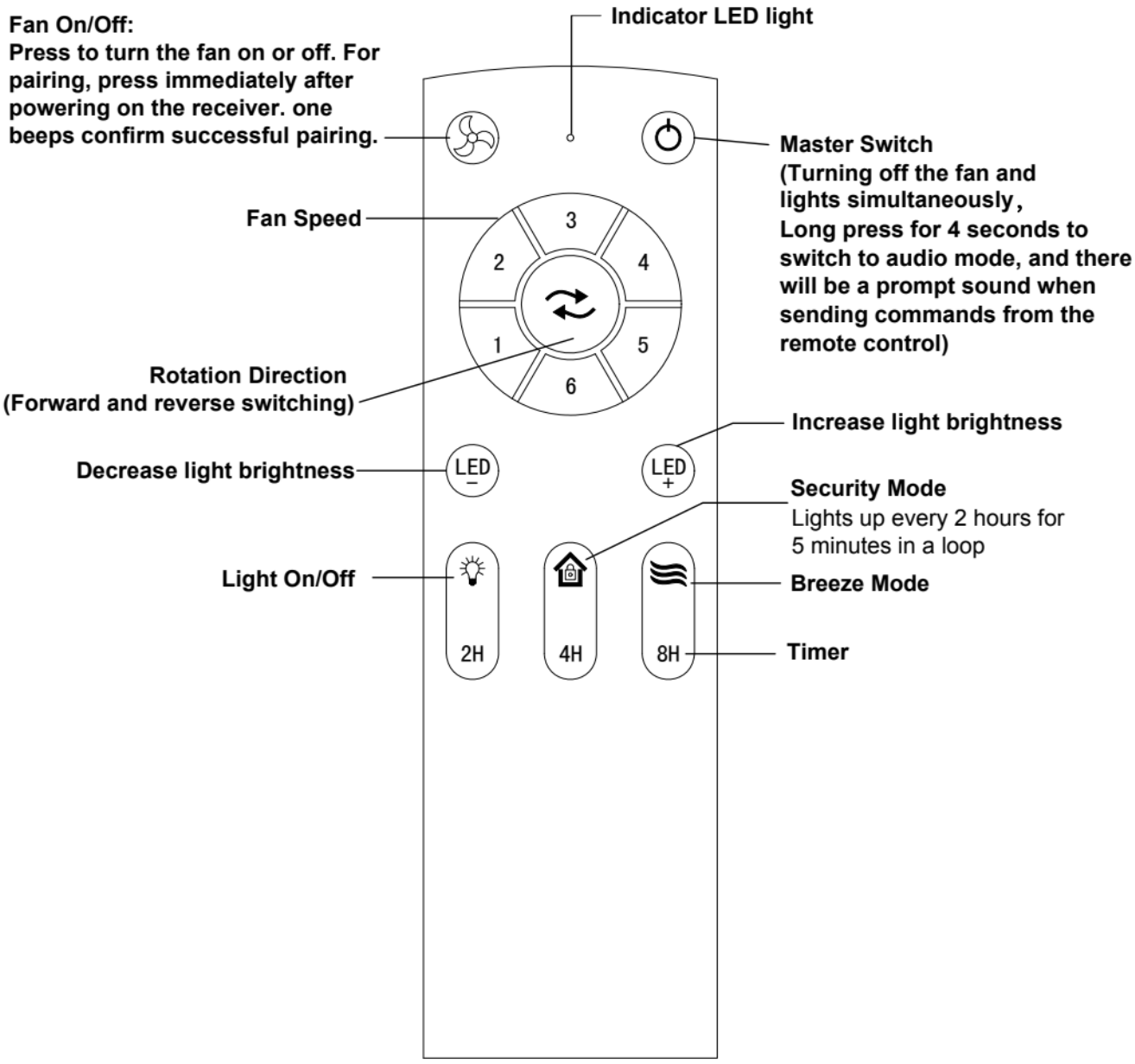

Figure 4

Fan On/Off: Press to turn the fan on or off. For pairing, press immediately after powering on the receiver. Two beeps confirm successful pairing.
LED Indicator: Displays the fan's status.
Fan Speed: Adjusts the fan speed (6 levels).
Rotation Direction: Switch between forward and reverse airflow.
Security Mode: Activates a periodic light cycle to simulate occupancy.
Breeze Mode: Simulates natural airflow patterns.
Timer: Set the fan to turn off after 2, 4, or 8 hours.
Master Switch: Turns off both the fan and light simultaneously.

How to Operate Your Ceiling Fan (continued)

NOTE: Wait for the fan to stop before reversing the direction of the blade rotation.

☐ If airflow is desired in the opposite direction, Press the button again. (Figure 5)

Fan forward and reverse switching	
Season	Rotation Direction
Summer	Clockwise
Winter	Counter-Clockwise

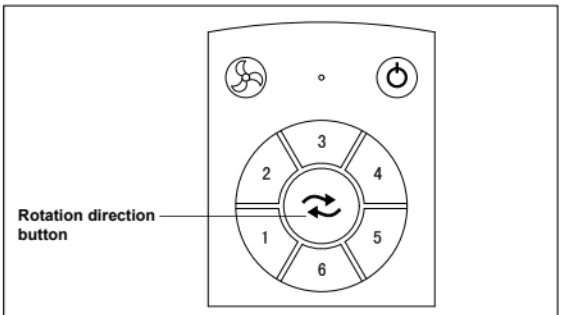

Figure 5

☐ Warm weather - (Forward) A downward air flow creates a cooling effect as shown in Figure 6. This allows you to set your air conditioner on a higher setting without affecting your comfort.

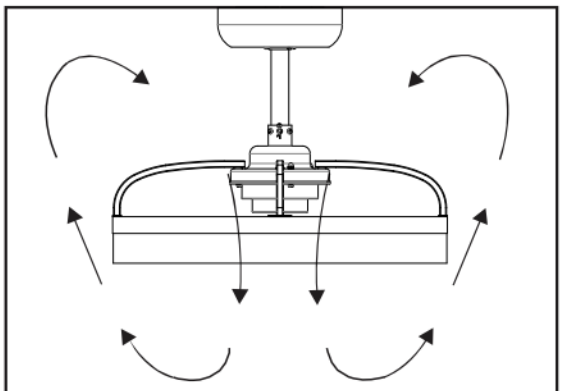
Figure 6

☐ Cool weather - (Reverse) An upward airflow moves warm air off the ceiling area as shown in Figure 7. This allows you to set your heating unit on a lower setting without affecting your comfort.

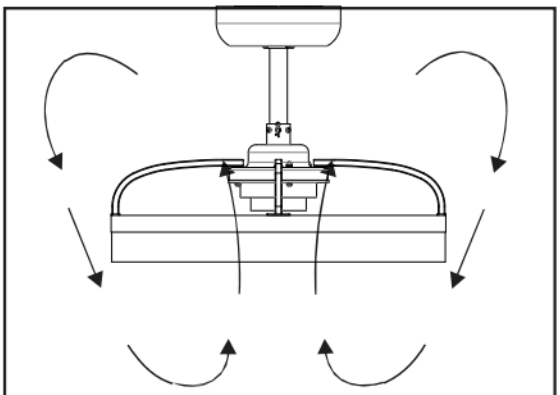
Figure 7

How to Install Your Remote Control Cradle

☐ **1. Installing Remote control Holder:** (Figure 1)
Attach remote control holder using the two provided screws.

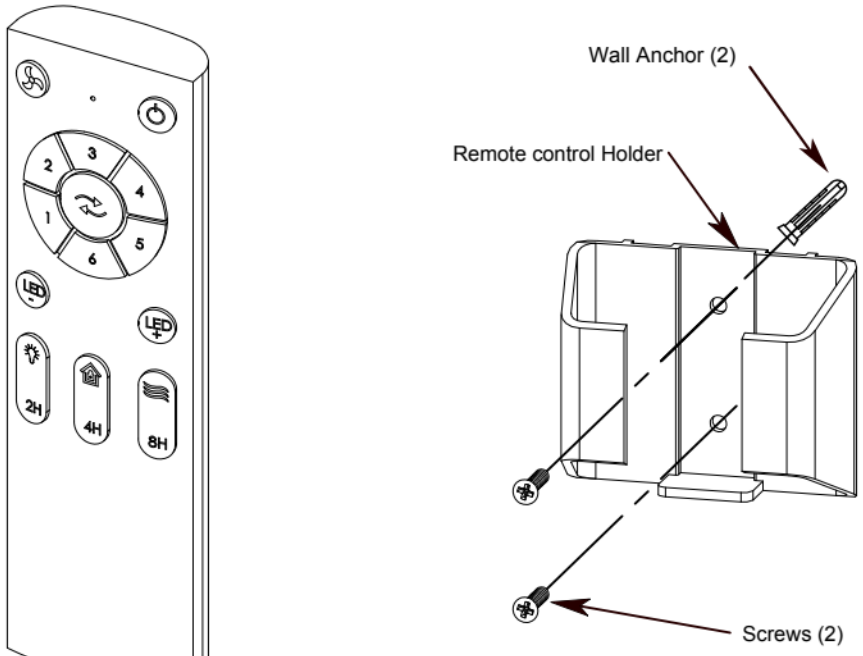

Figure 1

Maintenance

1. Periodic cleaning of your new ceiling fan is the only maintenance that is needed. When cleaning, use only a soft brush or lint free cloth to avoid scratching the finish. Abrasive cleaning agents are not required and should be avoided to prevent damage to finish.

CAUTION

Do not use water when cleaning your ceiling fan. It could damage the motor or the finish and create the possibility of electrical shock.

Replacement and disassembly diagram of fan blades.

Remove the fan nut cover by turning clockwise, insert the screwdriver into the empty position of the hairpin, pull out the hairpin, and then take out the fan blade. (Figure 1)

⚠ WARNING

Be careful not to tear off the balance stickers on the fan blades. The fan blades have been calibrated for dynamic balance, so as not to cause the lamp body to shake when the fan is running.(Figure 1)

Align the U-slot of the fan blade with the locating pin of the motor rotating shaft. The pin should sink into the U-slot of the fan, then insert the hairpin into the side hole of the motor rotating shaft and clamp it on the motor rotating shaft. Finally, screw the fan nut cover into the middle shaft of the motor and tighten it counterclockwise to fix the fan blade. (Figure 2)

⚠ WARNING

The U-slot of the fan blade must be installed on the locating pin of the motor rotating shaft, otherwise the fan cannot run.(Figure 2)

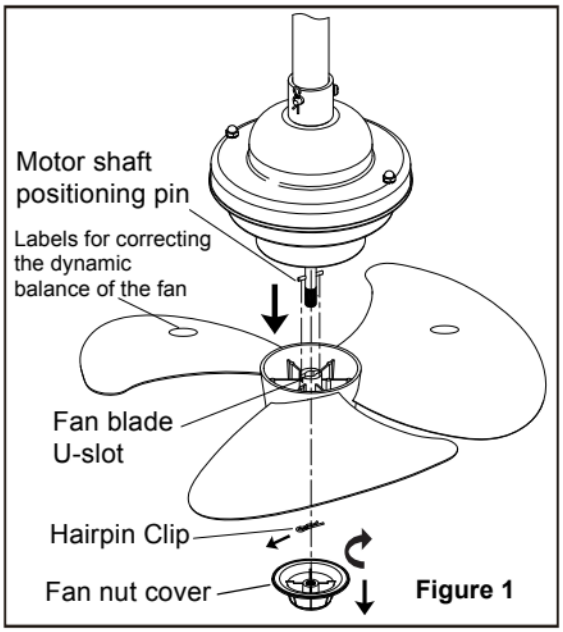

Figure 1

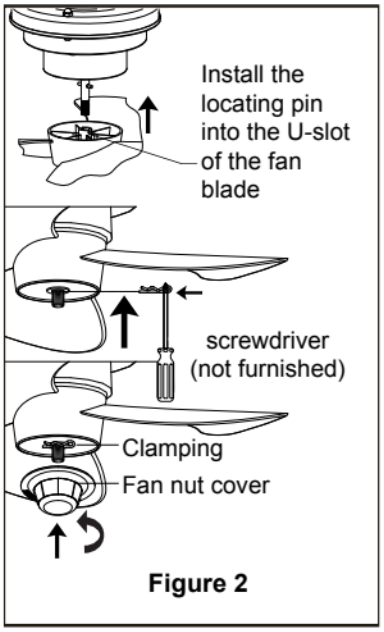

Figure 2

Troubleshooting

⚠ WARNING
For your own safety turn off power at fuse box or circuit breaker before trouble shooting your fan.

Trouble	Probable Cause	Suggested Remedy
1. FAN WILL NOT START	**1.** Fuse or circuit breaker blown. **2.** Loose power line connections to the fan, or loose switch wire connections in the switch housing. **3.** The blade cannot rotate freely. **4.** Dead battery in remote control.	**CAUTION: Make sure main power is turned off !** **1.** Check main and branch circuit fuses or circuit breakers. **2.** Check line wire connections to fan and switch wire connections in the switch housings. **3.** Make sure the blade spins freely. **4.** Replace with new battery. After the inspection is completed turn power back on or fan will not start.
2. FAN SOUNDS NOISY	**1.** Loose screws in motor housing. **2.** Wire connectors inside housing rattling. **3.** Motor noise caused by solid state variable speed control.	**CAUTION: Make sure main power is turned off !** **1.** Check to make sure all screws in motor housing are snug (do not overtighten). **2.** Check to make sure wire connectors in switch housing are not rattling against each other or against the interior wall of the switch housing. **3.** Use only the control that came with the fan. After the inspection is completed turn power back on or fan will not start.
3. FAN WOBBLES EXCESSIVELY	**1.** Setscrew in downrod support is loose. **2.** Setscrew in downrod/hanger ball assembly is loose. **3.** The groove hanger ball not lined up with the tab. **4.** Hanger bracket and/or ceiling outlet box is not securely fastened.	**1.** Tighten both setscrews securely in downrod support. **2.** Tighten the setscrew in the downrod/ hanger ball assembly. **3.** Re-hanging the hanger ball secure the tab into the groove. **4.** Tighten the hanger bracket screws to the outlet box, and secure outlet box.

Hunter Pro Tip:

Cleaning the Fan
Use soft brushes or cloths to prevent scratching.
Cleaning products may damage the finishes.

PARTS LIST MODEL NO. 50303 & 50304 & 50475**

Reference #	Description	Part #	Qty	MODEL:50303	MODEL:50304	MODEL:50475
1	Hanger Bracket Assembly	KL25701000	1	Matte Black	Brushed Nickel	Luxe Gold
2	Downrod/Hanger Ball Assembly	KL25801000	1	Matte Black	Brushed Nickel	Luxe Gold
3	Ceiling Canopy	KL25601000	1	Matte Black	Brushed Nickel	Luxe Gold
4	Fan blade	KL26301000	1	Matte Black	Silver	Luxe Gold
5	Receiver Assembly	KL79002000	1			
6	Hand-held Remote	KL26001000	1			
7	Install the hanger parts kit	KL27401000	1			

** Insert FINISH CODES (Refer to fan model number located on canopy)

Before discarding packaging material, be certain all parts have been removed.

HOW TO ORDER REPAIR PARTS

When ordering repair parts, always give the following information:

- Part Number
- Part Description
- Fan Model Number

Contact HunterFan Support for replacement parts at Support WWW.HunterFan.com.

Model 50303 & 50304 & 50475 **
Exploded-View Illustration

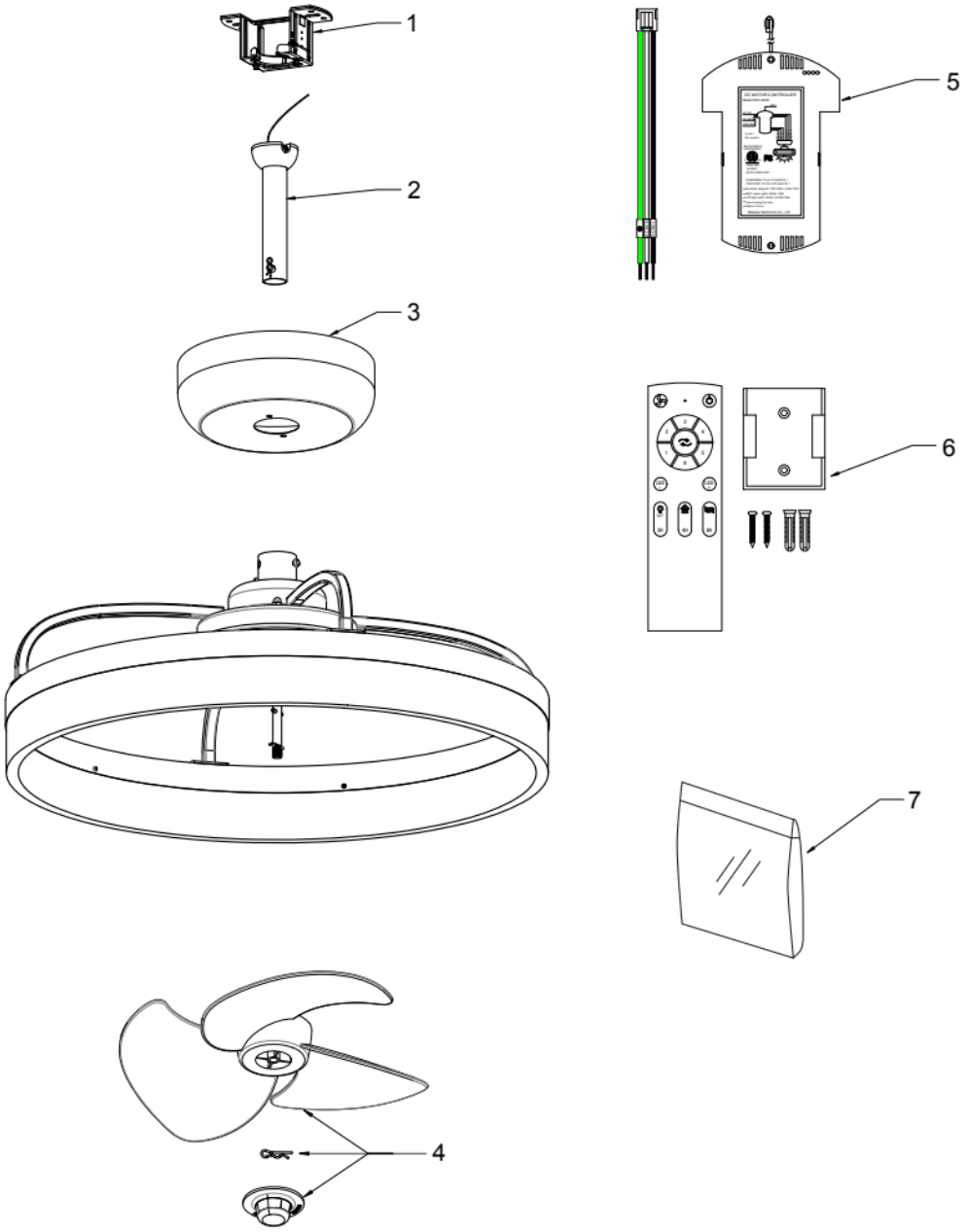

Figure 1

NOTE: *The illustration shown is not to scale or its actual configuration may vary. Product/parts are subject to change without notice.*